GREYSTONE COTTAGE PLAYHOUSE P280093

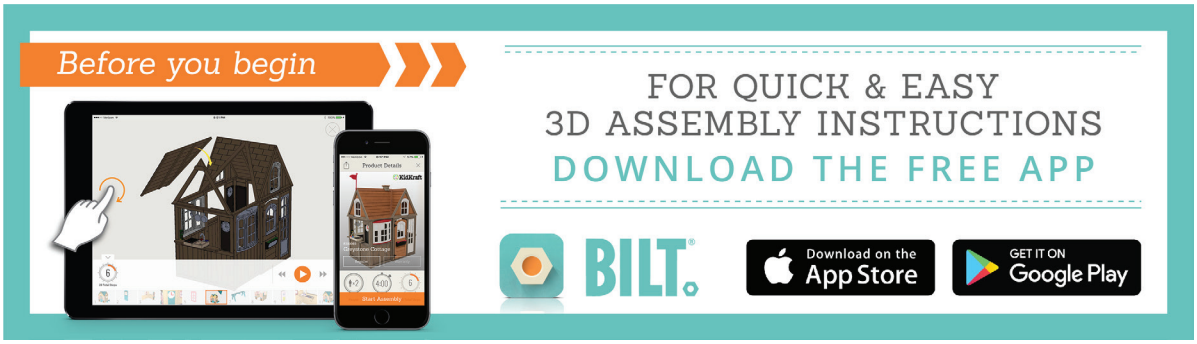

INSTALLATION AND OPERATING INSTRUCTIONS

WARNING

To reduce the risk of serious injury or death, you must read and follow these instructions. Keep and refer to these instructions often and give them to any future owner of this play set. Manufacturer contact information provided below.

OBSTACLE FREE SAFETY ZONE - 19' 1/8" x 16' 3/4" (5.8 x 5.1m)
CAPACITY - 5 Users Maximum, Ages 2 to 10.
RESIDENTIAL HOME USE ONLY. Not intended for public areas such as schools, churches, nurseries, day cares or parks.
WARNING - Only for domestic use.

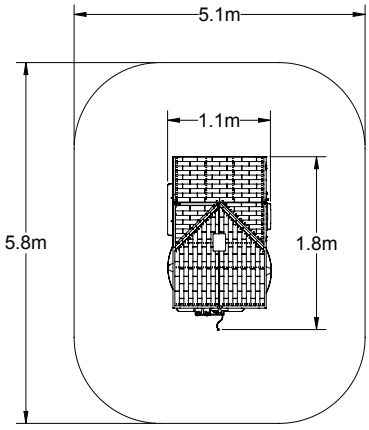

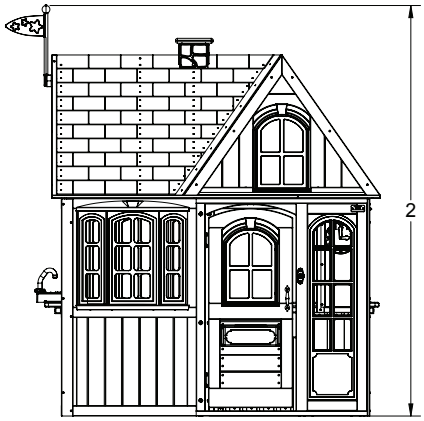

KidKraft

KidKraft, Inc.
4630 Olin Road
Dallas, Texas 75244 USA
customerservice@kidkraft.com
canadacustomerservice@kidkraft.com
1.800.933.0771
972.385.0100
For online parts replacement visit
https://parts.kidkraft.com/

KidKraft Netherlands BV
Olympisch Stadion 8
1076 DE Amsterdam
The Netherlands
europecustomerservice@kidkraft.com
+31 20 305 8620 M-F from 09:00 to 17:30 (GMT+1)
For online parts replacement visit
https://parts.kidkraft.eu/

Table of Contents

Warnings and Safe Play Instructions..... pg. 2
Instructions for Proper Maintenance..... pg. 2
Keys to Assembly Success..... pg. 3
About Our Wood – Limited Warranty..... pg. 4
Battery Instruction and Warranty..... pg. 5
Keys to Quick Assembly..... pg. 6
Part ID..... pg. 9
Step-By-Step Instructions..... pg. 14
Installation of ID/Warning Plaque..... pg. 50

Rev 07/29/2020

Warnings and Safe Play Instructions

CONTINUOUS ADULT SUPERVISION REQUIRED. Most serious injuries and deaths on playground equipment have occurred while children were unsupervised! Our products are designed to meet mandatory and voluntary safety standards. Complying with all warnings and recommendations in these instructions will reduce the risk of serious or fatal injury to children using this play system. Go over the warnings and safe play instructions regularly with your children and make certain that they understand and follow them. Remember on-site adult supervision is required for children of all ages.

⚠ WARNING

CHOKING HAZARD/SHARP EDGES & POINTS
Adult assembly required. This product contains small parts and parts with sharp edges and points. Keep parts away from children until fully assembled.

STRANGULATION HAZARD
- **NEVER** allow children to play with ropes, clotheslines, pet leashes, cables, chains or cord-like items when using this playhouse or to attach these items to the playhouse.
- **NEVER** allow children to wear loose fitting clothing, ponchos, hoods, scarves, capes, necklaces, items with draw-strings, cords or ties when using this playhouse.
- **NEVER** allow children to wear bike or sport helmets when using this playhouse.

Failure to prohibit these items, even helmets with chin straps, increases the risk of serious injury and death to children from entanglement and strangulation.

TIP OVER HAZARD
Choose a level location for the equipment. This can reduce the likelihood of the playhouse tipping over and loose-fill surfacing materials washing away during heavy rains.

DO NOT allow children to play on the playhouse until the assembly is complete.

PLACEMENT
Place the toy on a level surface at least 2m from any structure or obstruction such as fences, garages, house, overhanging branches, laundry or electical wires.

⚠ WARNING – Safe Play Instructions

- ✓ Dress children with well fitting and full foot enclosing footwear.
- ✓ Check for splintered, broken or cracked wood; missing, loose, or sharp edged hardware. Replace, tighten and or sand smooth as required prior to playing.
- ✓ Replace defective parts in accordance with manufaturer's instructions.
- ✘ Do not allow children to wear open toe or heel footwear like sandals, flip–flops or clogs.
- ✘ Do not permit climbing on equipment when it is wet.
- ✘ Do not permit rough play or use of equipment in a manner for which it was not intended. Standing or climbing on or jumping from the roof.

Instructions for Proper Maintenance

Your Cedar Summit Play System is designed and constructed of quality materials with your child's safety in mind. As with all outdoor products used by children, it will weather and wear. To maximize the enjoyment, safety and life of your Playhouse, it is important that you, the owner, properly maintain it.

Check the following at the beginning of the play season:

HARDWARE:
- ✓ Check metal parts for rust. If found, sand and repaint using a non-lead paint complying with 16 CFR 1303.
- ✓ Inspect and tighten all hardware. On wood assemblies DO NOT OVER-TIGHTEN as to cause crushing and splintering of wood.
- ✓ Check for sharp edges or protruding screw threads, add washers if required.

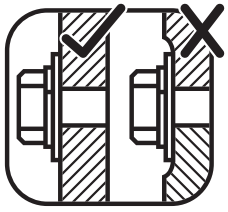

WOOD PARTS:
- ✓ Check all wood members for deterioration, structural damage and splintering. Sand down splinters and replace deteriorated wood members. As with all wood, some checking and small cracks in grain is normal.
- ✓ Applying a water repellent or stain (water-based) on a yearly basis is important maintenance to maintain maximum life and performance of the product.

Check twice a month during play season:

HARDWARE:
- ✓ Inspect for tightness. Must be firmly against, but not crushing the wood. DO NOT OVER-TIGHTEN. This will cause splintering of wood.
- ✓ Check for sharp edges or protruding screw threads. Add washers if required.

If you dispose of your playhouse: Please disassemble and dispose of your unit so that it does not create any unreasonable hazards at the time it is discarded. Be sure to follow your local waste ordinances.

Keys to Assembly Success

Tools Required

• Carpenters Level • Carpenters Square	• Claw Hammer • Tape Measure	• Standard or Cordless Drill • Pencil	• Safety Glasses • Adult Helpers

Part Identification Key
On each page, you will find the parts and quantities required to complete the assembly step illustrated on that page. Here is a sample.

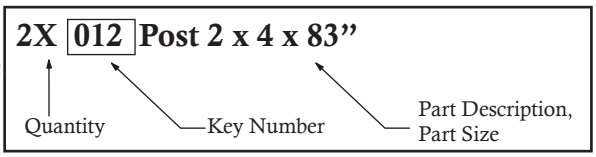

Key Number: The first two digits represent the step number. The third digit represents the piece. Note that if the part is used in multiple steps then the number only reflects the first step it is used in.

Symbols
Throughout these instructions symbols are provided as important reminders for proper and safe assembly.

This identifies information that requires special attention. Improper assembly could lead to an unsafe or dangerous condition.

Use Help Use Help

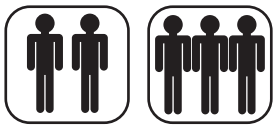

Where this is shown, 2 or 3 people are required to safely complete the step. To avoid injury or damage to the assembly make sure to get help!

Measure Distance

Check that assembly is square before tightening bolts.

Use a measuring tape to assure proper location.

Square Assembly

Check that set or assembly is properly level before proceeding.

Use Level

Pre-drill 1/8” & 3/16” Bit

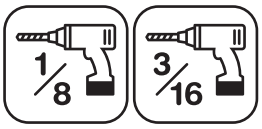

Pre-drill a pilot hole before fastening screw or lag to prevent splitting of wood.

Tighten Bolts

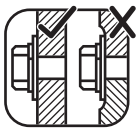

This indicates time to tighten bolts, but not too tight! Do not crush the wood. This may create splinters and cause structural damage.

CAUTION – Protrusion Hazard

Once the assembly is tightened, watch for exposed threads. If a thread protrudes from the T-Nut, remove the bolt and add washers to eliminate this condition. Extra washers have been provided for this purpose.

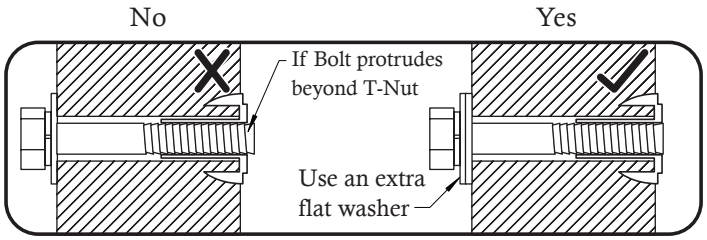

Proper Hardware Assembly
Lag screws require drilling pilot holes to avoid splitting wood. Only a flat washer is required. For ease of installation liquid soap can be used on all lag-type screws.

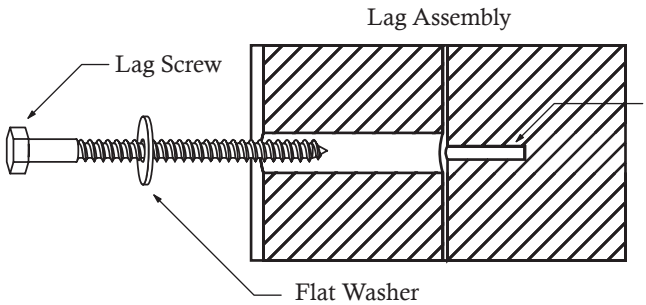

For bolts, tap T-Nut into hole with hammer. Insert the hex bolt through lock washer first then flat washer then hole. Because the assemblies need to be squared do not completely tighten until instructed. Pay close attention to diameter of the bolts. 5/16” is slightly larger than 1/4”.

Note: Wafer head bolts with blue lock tight or a bolt with a Ny-Lok nut do NOT require a lock washer.

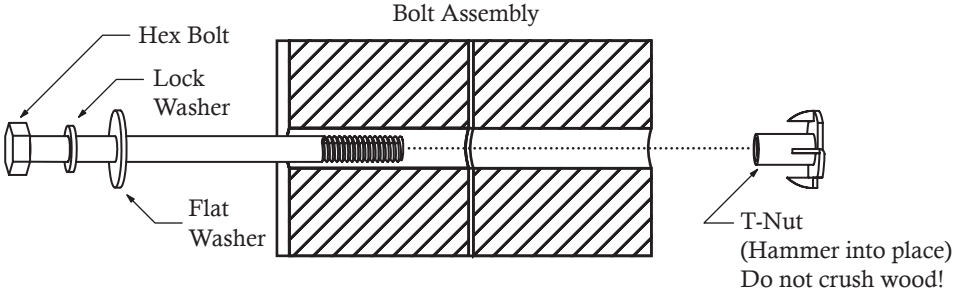

About Our Wood

KidKraft uses only premium playset lumber, ensuring the safest product for your children's use. Although great care has been taken in selecting the best quality lumber available, wood is a product of nature and susceptible to weathering (changes in the aesthetics of the wood). A light sanding may be required to remove minor splinters. For your information, we have described some changes that may occur as a result of weathering:

1. **Checking** Checks are surface cracks in the wood along the grain. 4" x 4" material will experience more checking than 2", 1-1/4" or 1" material be cause the surface and interior moisture content will vary more widely than in thinner wood.
2. **Warping** Warping refers to any distortion (twisting, cupping) from the true plane that may take place during weathering.
3. **Fading** Wood exposed to sunlight, will over time, turn a grey color.

Note: The above changes will not affect the strength of the product.

What causes weathering?

One of the main reasons for weathering is the effects of water (moisture); the moisture content of the wood at the surface is different than the interior of the wood. As the moisture moves in or out of the wood (result of climate changes), the different moisture content causes tension in the wood, which can result in checking and or warping.

How can I reduce the amount of weathering to my Play System?

At the factory we have added water repellent to the stain. This water repellent decreases the amount of water absorption during rain or snow thus decreasing the tension in the wood. Sunlight will break down the water repellent, applying a water repellent or stain on a yearly basis is important maintenance. (see your local stain and paint supplier for a recommended product) Also if storing the product before installation, make sure you store out of direct sunlight in a cool dry place.

Will weathering affect the strength of my Play System?

Most weathering is just the normal result of nature and will not affect safe play and enjoyment for your child. However if you are concerned that a part has experienced a severe weathering problem please call our consumer relations department for further assistance.

Complete and mail registration card to receive important product notifications and assure prompt warranty service.

10 Year Limited Warranty

KidKraft warrants that this product is free from defect in materials and workmanship for a period of one year from the original date of purchase. In addition, lumber is warranted for 10 years against structural failure due to rot and insect damage. All other parts, such as hardware, swings, rides, accessories, and slides carry a one-year warranty only.

This warranty applies to the original owner and registrant and is non-transferable.

Regular maintenance is required to assure the integrity of your Play System. Failure by the owner to maintain the product according to the maintenance requirements may void this warranty. This warranty does not cover any inspection cost.

This Limited Warranty does not cover:

- Labor for replacement of any defective item(s);
- Incidental or consequential damages;
- Cosmetic defects which do not affect performance or integrity;
- Vandalism; improper use or installation; acts of nature;
- Minor twisting, warping, checking, or any other natural occurring properties of wood that do not affect performance or integrity.

KidKraft products have been designed for safety and quality. Any modifications made to the original product could damage the structural integrity of the unit leading to failure and possible injury. KidKraft cannot assume any responsibility for modified products. Furthermore, modification voids any and all warranties.

This product is warranted for **RESIDENTIAL USE ONLY**. Under no circumstance should a KidKraft Play System be used in public settings such as schools, churches, playgrounds, parks, day cares and the like. Such use may lead to product failure and potential injury. Any and all public use will void this warranty. KidKraft disclaims all other representations and warranties of any kind, express or implied.

This Warranty gives you specific legal rights. You may have other rights as well which vary from state to state or province to province. This warranty excludes all consequential damages, however, some states do not allow the limitation or exclusion of consequential damages, and therefore this limitation may not apply to you.

Battery Instruction and Warranty

This device complies with Part 15 of the FCC Rules. Operation is subject to the following two conditions:

(1) This device may not cause harmful interference, and (2) this device must accept any interference received, including interference that may cause undesired operation.

NOTE: This equipment has been tested and found to comply with the limits for a Class B digital device, pursuant to part 15 of the FCC Rules. These limits are designed to provide reasonable protection against harmful interference in a residential installation. This equipment generates, uses and can radiate radio frequency energy and, if not installed and used in accordance with the instructions, may cause harmful interference to radio communications. However, there is no guarantee that interference will not occur in a particular installation. If this equipment does cause harmful interference to radio or television reception, which can be determined by turning the equipment off and on, the user is encouraged to try to correct the interference by one or more of the following measures:

- Reorient or relocate the receiving antenna.

- Increase the separation between the equipment and receiver.

- Connect the equipment into an outlet on a circuit different from that to which the receiver is connected.

- Consult the dealer or an experienced radio /TV technician for help.

Note: Changes or modifications not expressly approved by the manufacturer responsible for compliance could void the user's authority to operate the equipment.

Please retain the information on this pack for future reference.

- Batteries should always be installed and changed under adult supervision.

- Non-Rechargeable batteries are not to be recharged.

- Rechargeable batteries are only to be charged under adult supervision.

- Only batteries of the same equivalent type as recommended are to be used.

- Batteries are to be inserted with the correct polarity.

- Exhausted batteries are to be removed from the toy and disposed of properly.

- The supply terminals are not to be short circuited.

- Different types of batteries or new and used batteries are not to be mixed.

- DO NOT mix alkaline, standard (carbon-zinc) or rechargeable batteries.

- Be sure to insert new batteries with positive (+) side up.

- Rechargeable batteries are to be removed from the toy before being charged.

- EU Regulations require exhausted batteries to be separately collected so that they can be treated using the best available recovery and recycling techniques. This will minimize the impact on the environment and human health from soil and water contamination by any hazardous substances, decrease the resources required to make new products and avoid using up landfill space.

- Batteries or battery packs must be recycled or disposed of properly. When the batteries in this product have reached the end of their useful life, they should not be disposed of with other household waste.

- Please do your part by keeping waste batteries out of the municipal waste stream!

Your Key To Quick Assembly

SORTING WOOD PARTS INTO EACH ASSEMBLY STEP WILL SAVE TIME!

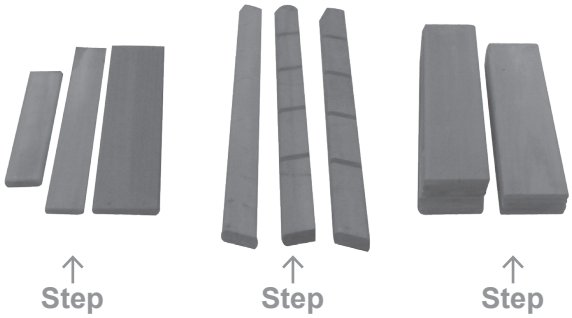

SAVE TIME - TIP #1:

Open box with wood parts and look for the Key Number stamped on the end of the wood part (see chart below). Sort each wood part into the different assembly steps.

1X **131** **Cafe Top FSC 15.9 x 127 x 1225.6 mm**

Part Quantity | Key Number | Part Description | Part Size

Step Number (This is Step 13)	1 3 1	Order Listed (The order the part is listed in step 13)

Key Number: The first two digits represent the step number. The third digit represents the order in which the part is listed in the step.

Note that if the part is used in multiple steps then the key number only reflects the first step it is used in.

SAVE TIME - TIP #2:

In addition to the key number stamp, you can also identify the wood parts by using the Parts Identification pages in the manual.

HARDWARE:

The majority of each hardware part comes packed in a separate bag so you do not need to sort the hardware. Each assembly step indicates which hardware (bolt, screw, washer etc.) you will require to complete the step.

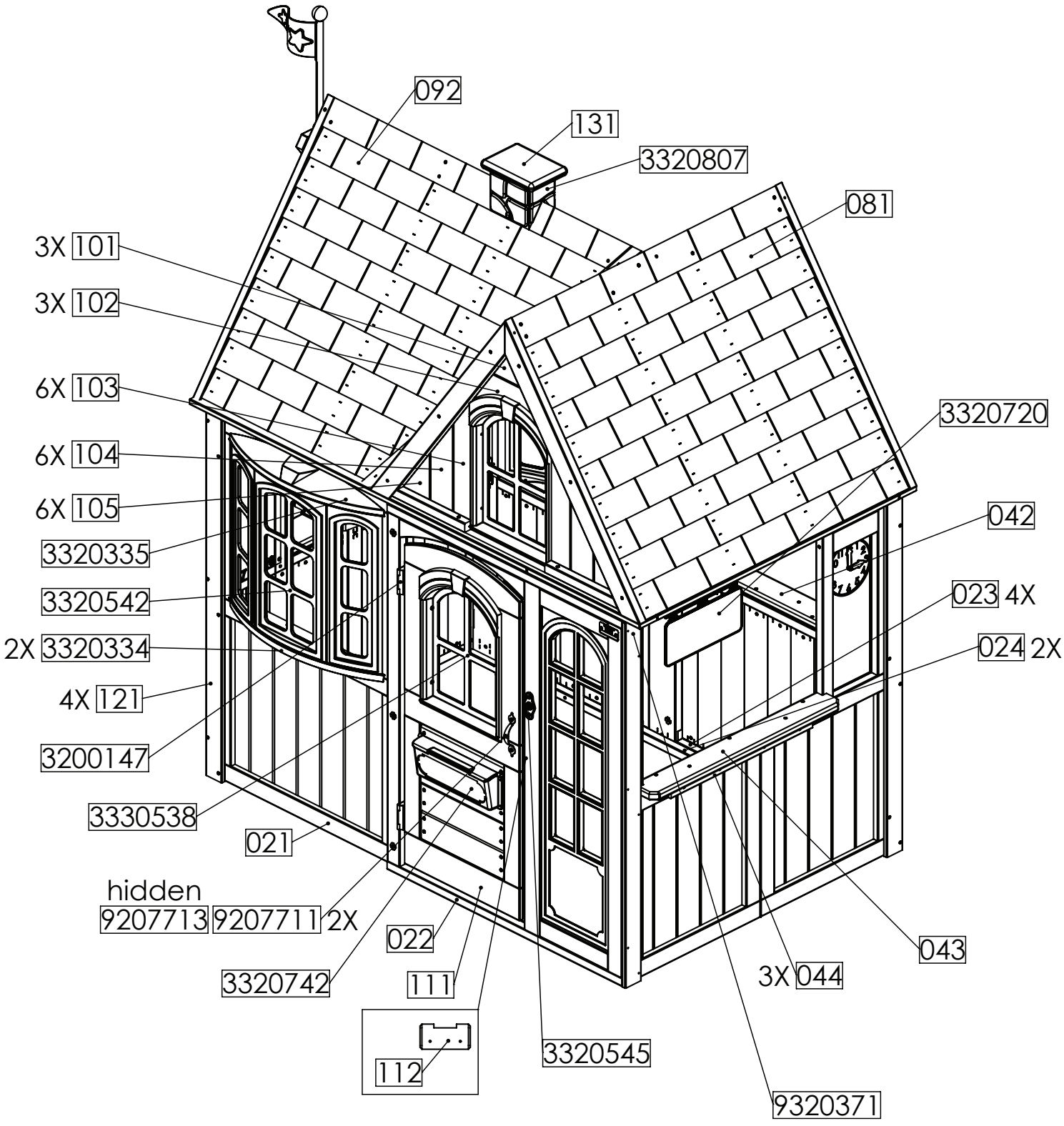
092
131
3320807
081
3X 101
3X 102
6X 103
3320720
6X 104
042
6X 105
3320335
3320542
023 4X
2X 3320334
024 2X
4X 121
3200147
3330538
021
hidden
9207713 9207711 2X
022
043
3320742
111
3X 044
3320545
112
9320371

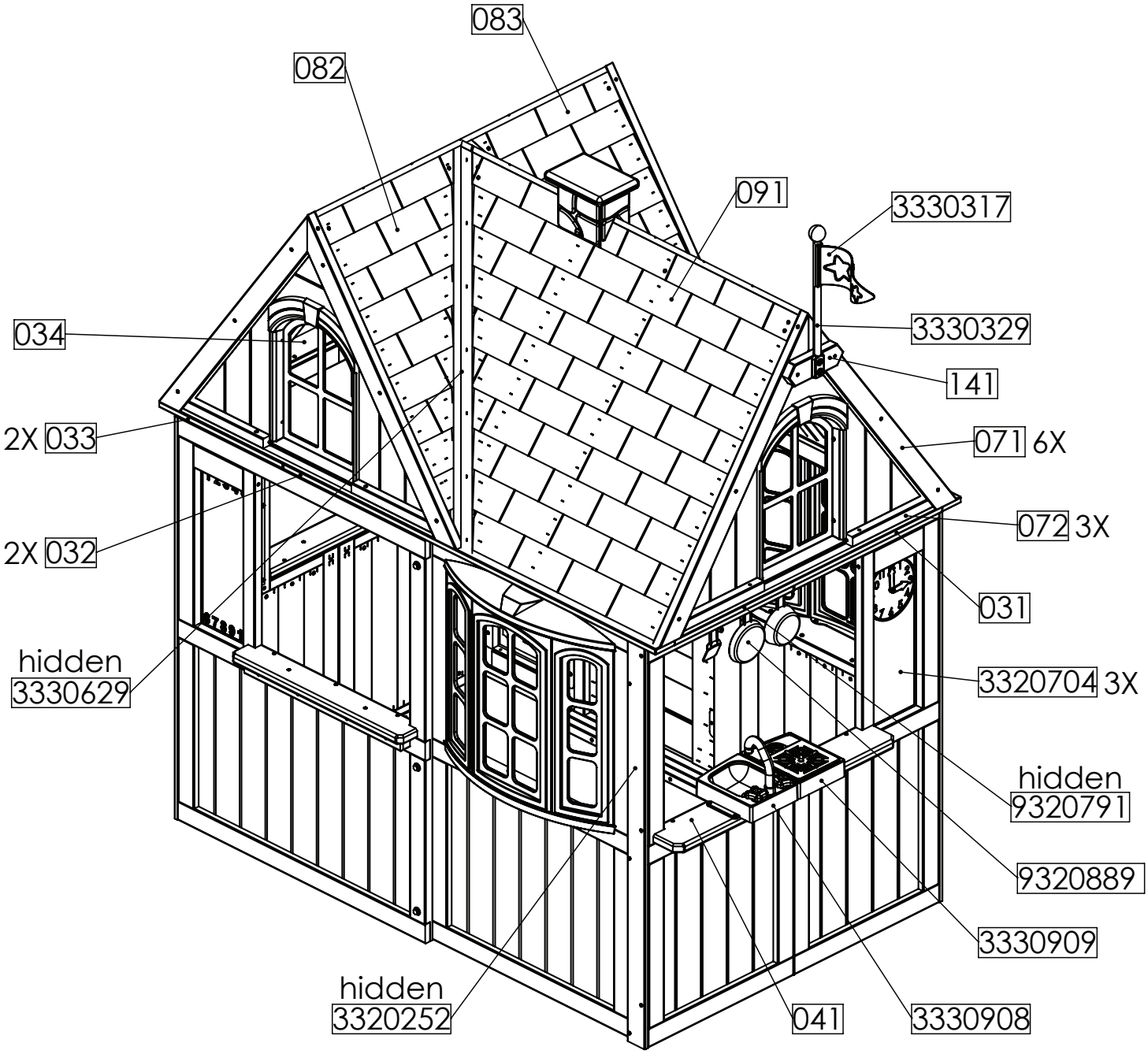
083
082
091
3330317
034
3330329
141
2X 033
071 6X
2X 032
072 3X
031
hidden
3330629
3320704 3X
hidden
9320791
9320889
3330909
hidden
3320252
041
3330908

Part Identification (Reduced Part Size)

4pc. - **121** - 12.7 x 57.2 x 1063.6mm - Corner Trim FSC- 48046713

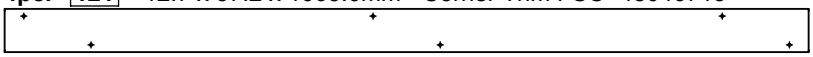

(1/2 x 2-1/4 x 41-7/8")

3pc. - **102** - 15.9 x 101.6 x 254mm - Gable Top A FSC - 48081836

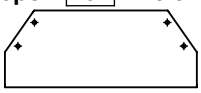

(5/8 x 4 x 10")

3pc. - **101** - 15.9 x 127 x 177.8mm - Gable Top B FSC 48082236

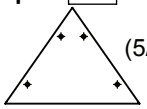

(5/8 x 5 x 7")

6pc. - **103** - 25.4 x 82.6 x 440.1mm - Gable Side A FSC- 48082136

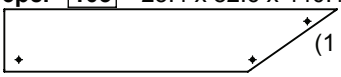

(1 x 3-1/4 x 17-21/64")

6pc. - **104** - 15.9 x 82.6 x 322.1mm - Gable Side B FSC 48082036

(5/8 x 3-1/4 x 12-11/16")

6pc. - **105** - 15.9 x 133.4 x 204.1mm - Gable Side C FSC - 48081936

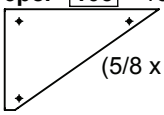

(5/8 x 5-1/4 x 8-1/32")

1pc. - **131** - 23.8 x 133.4 x 184.2mm - Chimney Top FSC 48060836

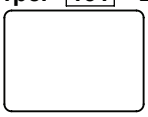

(15/16 x 5-1/4 x 7-1/4")

1pc. - **041** - 23.8 x 108 x 714.4mm - Table Top A FSC - 48081213

(15/16 x 4-1/4 x 28-1/8")

1pc. - **042** - 23.8 x 82.6 x 552.5mm - Table Top B FSC - 48081313

(15/16 x 3-1/4 x 21-3/4")

1pc. - **043** - 23.8 x 82.6 x 676.3mm - Table Top C FSC - 48081413

(15/16 x 3-1/4 x 26-5/8")

6pc. - **071** - 25.4 x 57.2 x 839.8mm - Roof End FSC - 48080913

(1 x 2-1/4 x 33-1/16")

3pc. - **044** - 31.8 x 31.8 x 514.4mm - Table Support FSC - 48080813

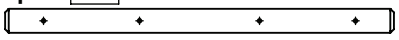

(1-1/4 x 1-1/4 x 20-1/4")

3pc. - **072** - 25.4 x 38.1 x 823.9mm - Roof Support Assembly FSC - 478041013

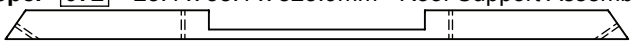

(1 x 1-1/2 x 32-7/16")

2pc. - **032** - 15.9 x 63.5 x 1206.5mm - Soffit Long FSC - 48080713

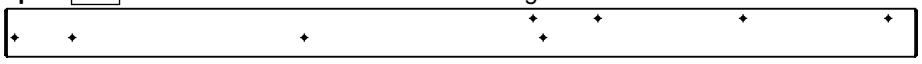

(5/8 x 2-1/2 x 47-1/2")

1pc. - **031** - 15.9 x 73 x 863.6mm - Soffit FSC - 48081013

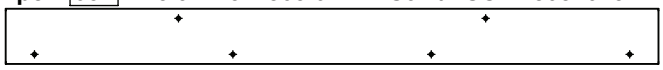

(5/8 x 2-7/8 x 34")

2pc. - **033** - 15.9 x 63.5 x 403.2mm - Soffit Short FSC - 48080613

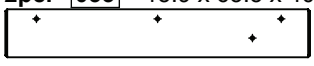

(5/8 x 2-1/2 x 15-7/8)

1pc. - **034** - 15.9 x 88.9 x 863.6mm - Soffit Wide FSC - 48081113

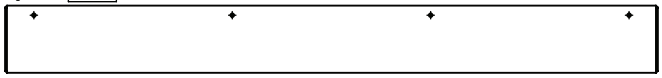

(5/8 x 3-1/2 x 34")

2pc. - **024** - 25.4 x 25.4 x 965.2mm - Long Tie FSC - 48081613

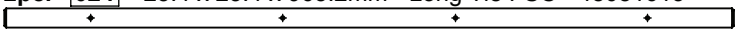

(1 x 1 x 38")

Part Identification (Reduced Part Size)

1pc. - **112** - 23.8 x 63.5 x 127mm - Door Latch Block FSC - 48031913

(15/16 x 2-1/2 x 5")

4pc. - **023** - 25.4 x 25.4 x 482.6mm - Panel Tie FSC - 48045313

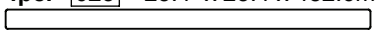

(1 x 1 x 19")

1pc. - **141** - 25.4 x 57.2 x 177.8mm - Flag Block FSC - 48081713

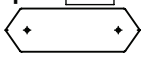

(1 x 2-1/4 x 7")

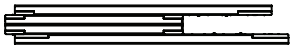

1pc. - **021** - 101.6 x 749.3 x 1066.8mm - Panel Assembly A FSC - 478081113

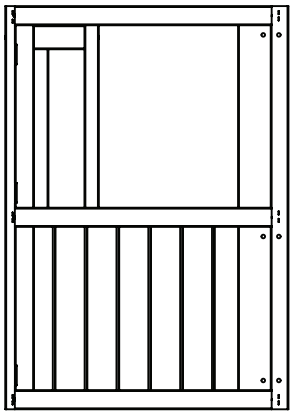

(4 x 29-1/2 x 42")

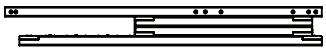

1pc. - **022** - 101.6 x 838.2 x 1066.8mm - Panel Assembly B FSC - 478081013

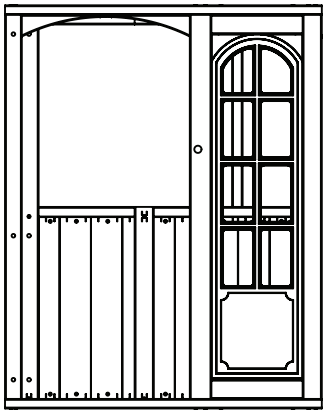

(4 x 33 x 42")

1pc. - **111** - 25.4 x 412.8 x 975.8mm - Door Assembly FSC - 478064036

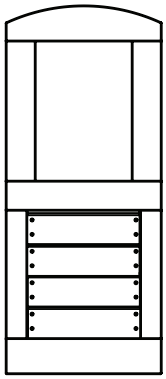

(1 x 16 1/4 x 38 27/64)

Part Identification (Reduced Part Size)

1pc. - **081** - 31.8 x 836.3 x 939.8mm - Roof Panel - Front Full FSC - 478070006

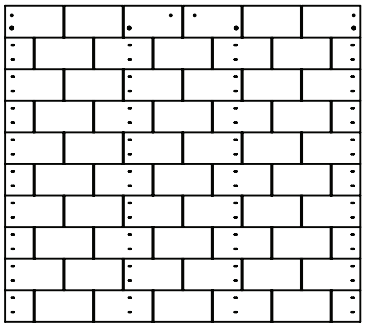

(1-1/4 x 32-59/64 x 37")

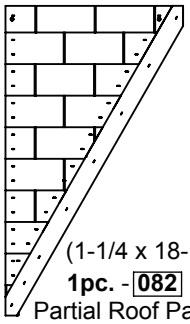

(1-1/4 x 18-1/2 x 32-17/64")

1pc. - **082** - 31.8 x 469.9 x 819.4mm Partial Roof Panel Left FSC 478073506

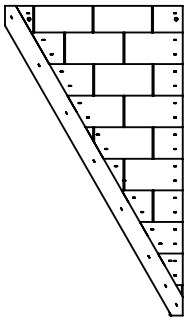

(1-1/4 x 18-1/2 x 32-17/64")

1pc. - **083** - 31.8 x 469.9 x 819.4mm Partial Right Roof Panel FSC 478074906

1pc. - **092** - 31.8 x 839.8 x 1100.2mm Half Roof Right FSC - 478072006

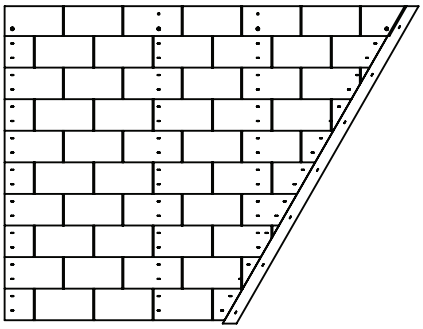

(1-1/4 x 33-1/16 x 43-5/16")

1pc. - **091** - 31.8 x 826.1 x 1092.4mm Half Roof Left FSC - 478070506

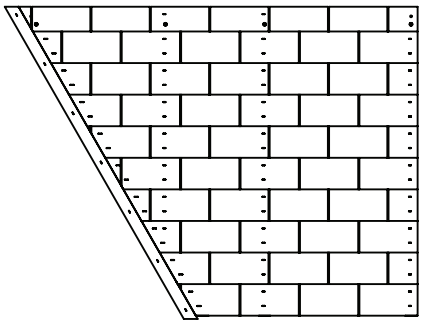

(1-1/4 x 32-17/32 x 43-1/64")

Hardware Identification (Actual Size)

6pc. (LW1) - 1/4" Lock Washer - (51303200)

6pc. (FW1) - 1/4" Flat Washer - (51103200)

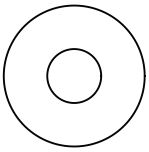

6pc. [TN1] - 1/4" T - Nut -(54503200)

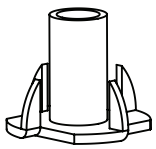

6pc. (S39) - Wood Screw #5 x 3/4" - (52013903)

134pc. (S37) - Pan Screw #7 x 5/8" - (52433009)

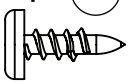

100pc. (S20) - Wood Screw #8 x 1-3/8" - (52043516)

26pc. (S38) - Pan Screw #7 x 1-1/8" - (52433014)

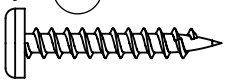

61pc. (S15) - Wood Screw #8 x 1-3/4" - (52043513)

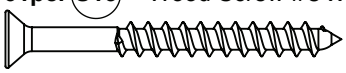

14pc. (S0) - Truss Screw #8 x 7/8" - (52933505)

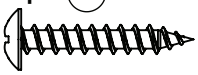

36pc. (S11) - Wood Screw #8 x 2" - (52043520)

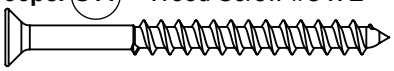

13pc. (S3) - Wood Screw #8 x 2-1/2" - (52043522)

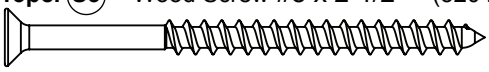

6pc. (H2) - Hex Bolt 1/4 x 2" - (53703220)

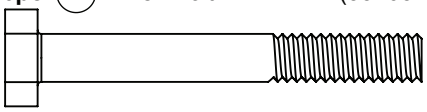

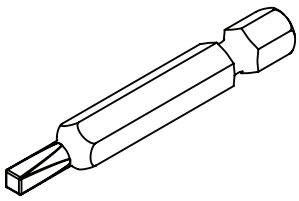

1pc. (D4) - #2 x 2 Robertson Driver Bit - (9200014)

Note: Hardware bag including some extra

Part Identification (Reduced Part Size)

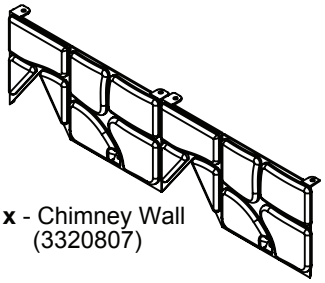

1x - Chimney Wall
(3320807)

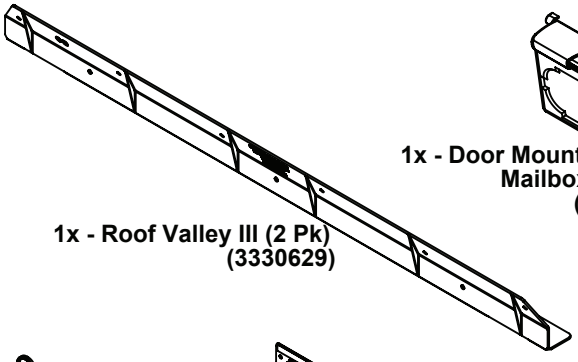

1x - Roof Valley III (2 Pk)
(3330629)

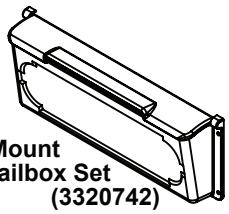

1x - Door Mount Mailbox Set
(3320742)

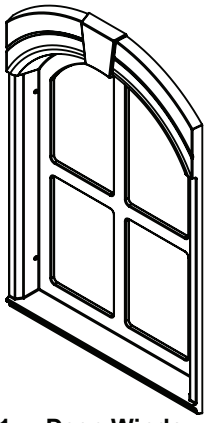

1x - Deep Window (4Pk)
(3330538) White

1x - Door Bell 2/Door Trim
(3320545)

1x - Playhouse Plaque
(9320371)

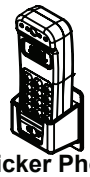

1x - Clicker Phone & Phone Pocket Set
(3320252)

1x - Deluxe Kitchen Set
(3330027)

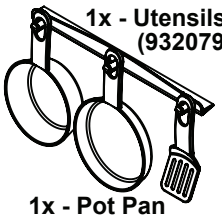

1x - Utensils Shelf
(9320791)

1x - Pot Pan Spatula
(9320889)

1x - BBQ Cook Top Base Assembly
(3330909)

1x - BBQ Sink Set
(3330908)

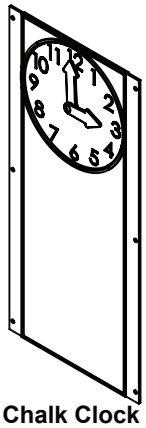

3x - Chalk Clock Sign
(3320704)

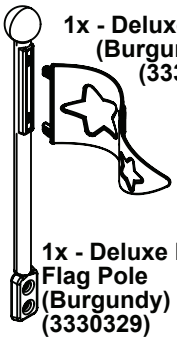

1x - Deluxe Flying Flag (Burgundy) (1Pk)
(3330317)

1x - Deluxe Flying Flag Pole (Burgundy) (1Pk)
(3330329)

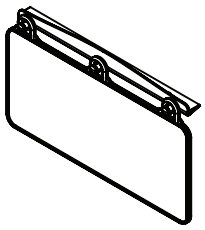

1x - Hanging Sign/Utensils Shelf
(3320720)

1x - Folding Bay Window Roof
(2Pk)
(3320335)

Bay Window Top

Bay Window

1x
Folding Bay Window
(2Pk)
(3320542)

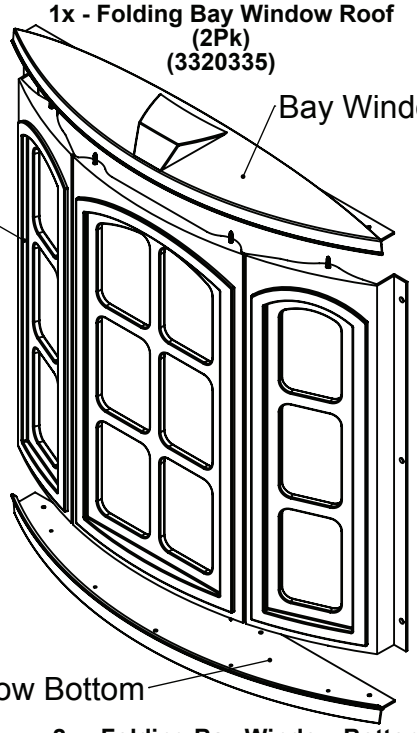

Bay Window Bottom

2x - Folding Bay Window Bottom
(1Pk)
(3320334)

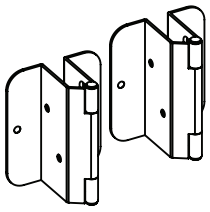

1x - Factory Mount Door Hinge (2Pk)
(3200147)

1x - Door Hardware (3201730)

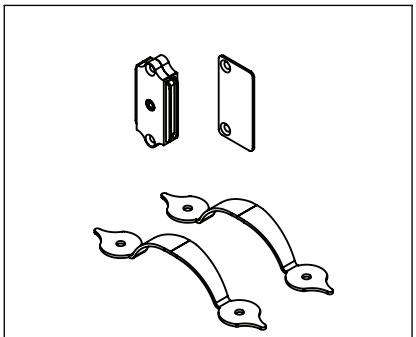

1x - Magnetic Catch Kit (9207713)
2x - Door Handle (Black) (9207711)

Step 1: Inventory Parts - Read This Before Starting Assembly

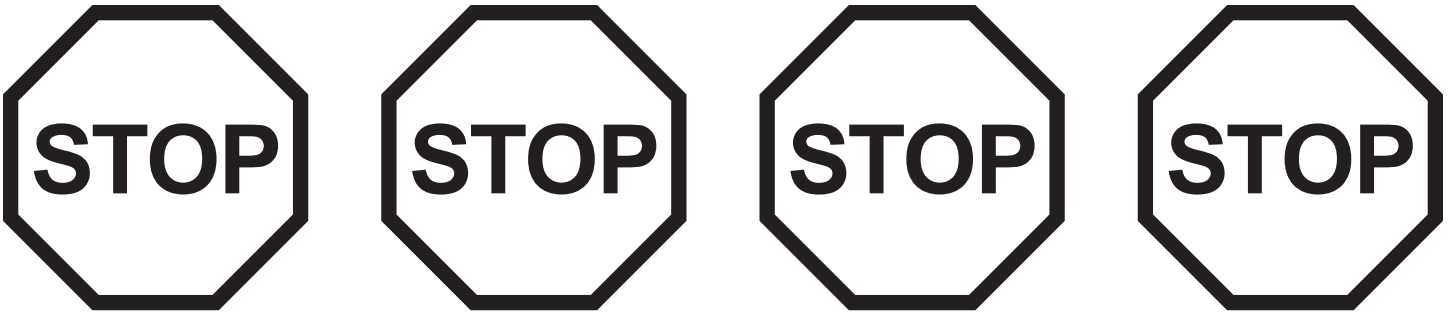

A. This is the time for you to inventory all your hardware, wood and accessories, referencing the parts identification sheets. This will assist you with your assembly.

- The wood pieces will have the key number stamped on the ends of the boards. Organize the wood pieces by step, as per the key numbering system below.

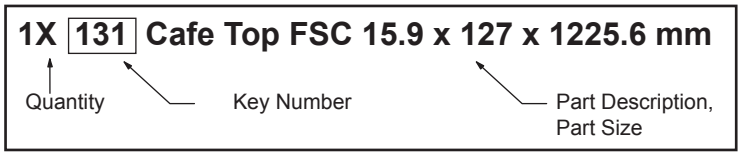

Key Number: The first two digits represent the step number. The third digit represents the piece. Note that if the part is used in multiple steps then the number only reflects the first step it is used in.

- Please refer to Page 3 for proper hardware assembly.
- Each step indicates which bolts and/or screws you will need for assembly, as well as any flat washers, lock washers, t-nuts or lock nuts.

B. If there are any missing or damaged pieces or you need assistance with assembly please contact the consumer relations department directly. Call us before going back to the store.

+31 20 305 8620
europecustomerservice@KidKraft.com
For online parts replacement visit https://parts.kidkraft.eu/

C. Read the assembly manual completely, paying special attention to ANSI warnings; notes; and safety/maintenance information on pages 1 - 6.

D. Before you discard your cartons fill out the form below.

- The carton I.D. stamp is located on the end of each carton.
- Please retain this information for future reference. You will need this information if you contact the Consumer Relations Department.

MODEL NUMBER: **P280093**

CARTON I.D. STAMP: __ __ __ __ __ 14459 ___ (Box 1)

Step 2: Frame Assembly
Part 1

A: Stand (021) Panel Assembly A and (022) Panel Assembly B so that window openings are at the top. (Fig. 2.1)

B: Flush to the bottom and centred on the Side Walls attach 1 (023) Panel Tie to each wall with 4 (S15) #8 x 1-3/4" Wood Screws per board. (Fig. 2.2)

Fig. 2.1

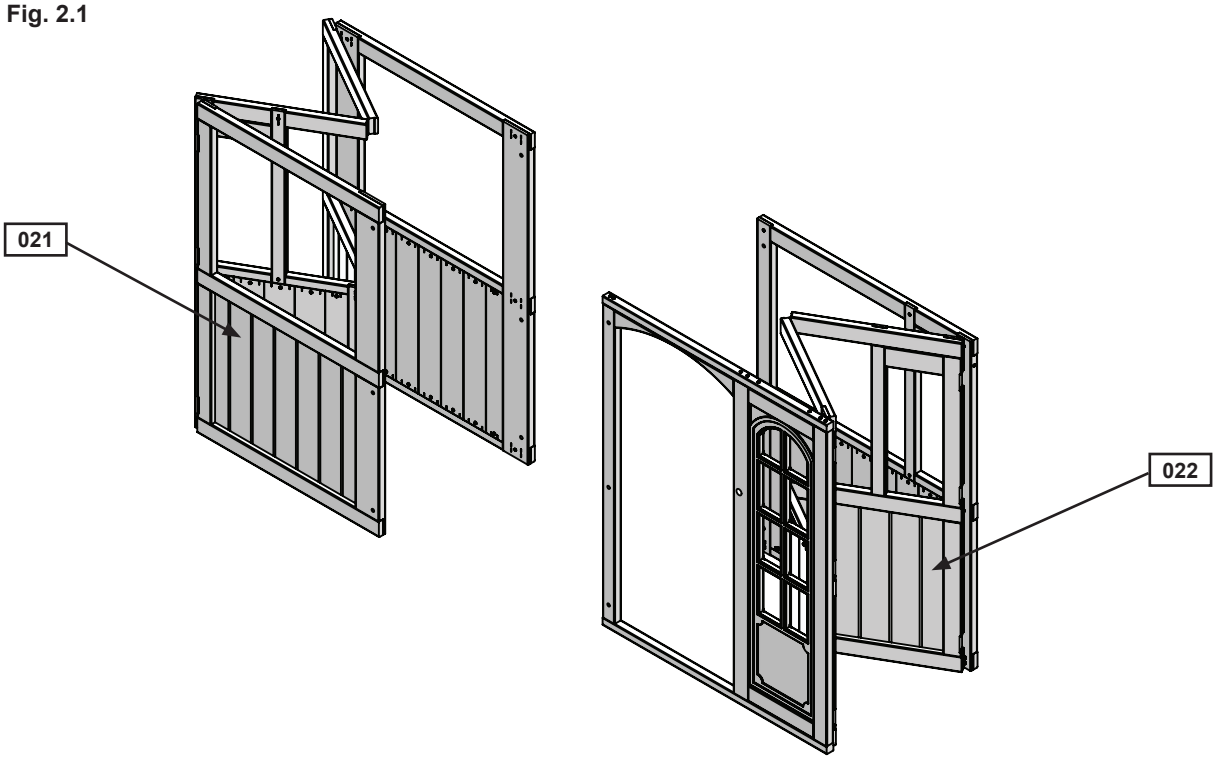

Fig. 2.2

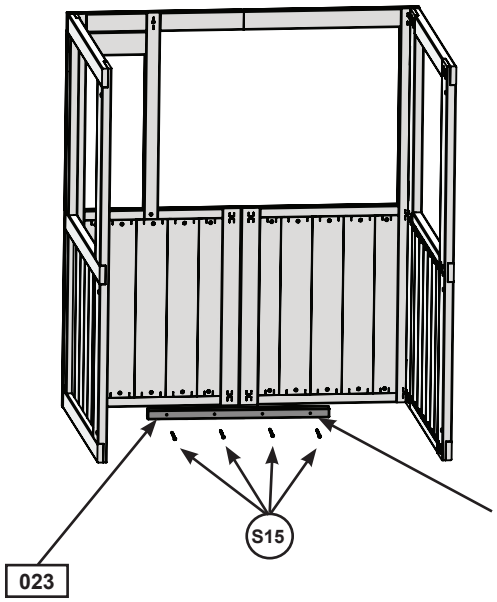

Flush to the bottom and centred on the Side Walls

Repeat on the other Side Wall

Wood Parts	Hardware
1 x 021 Panel Assembly A 4 x 29-1/2 x 42"	8 x S15 #8 x 1-3/4" Wood Screw
1 x 022 Panel Assembly B 4 x 33 x 42"	
2 x 023 Panel Tie 1 x 1 x 19"	

Step 2: Frame Assembly
Part 2

C: From inside the assembly on the right hand side of the door opening, measure 6-11/16” down from the top of the frame and attach 1 Door Hinge using 3 (S39) #5 x ¾” Wood Screws. (Fig. 2.3 and 2.4)

D: Measure 5-1/2” up from the bottom of the frame and attach the lower hinge using 3 (S39) #5 x ¾” Wood Screws. (Fig. 2.3 and 2.4)

Fig. 2.4

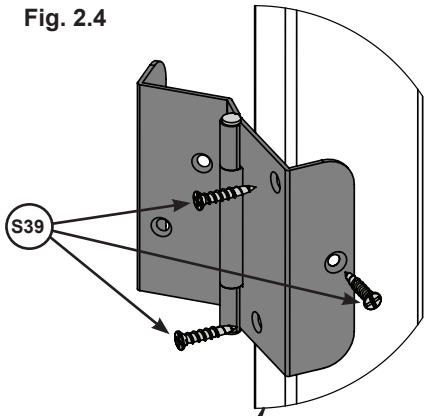

Fig. 2.3

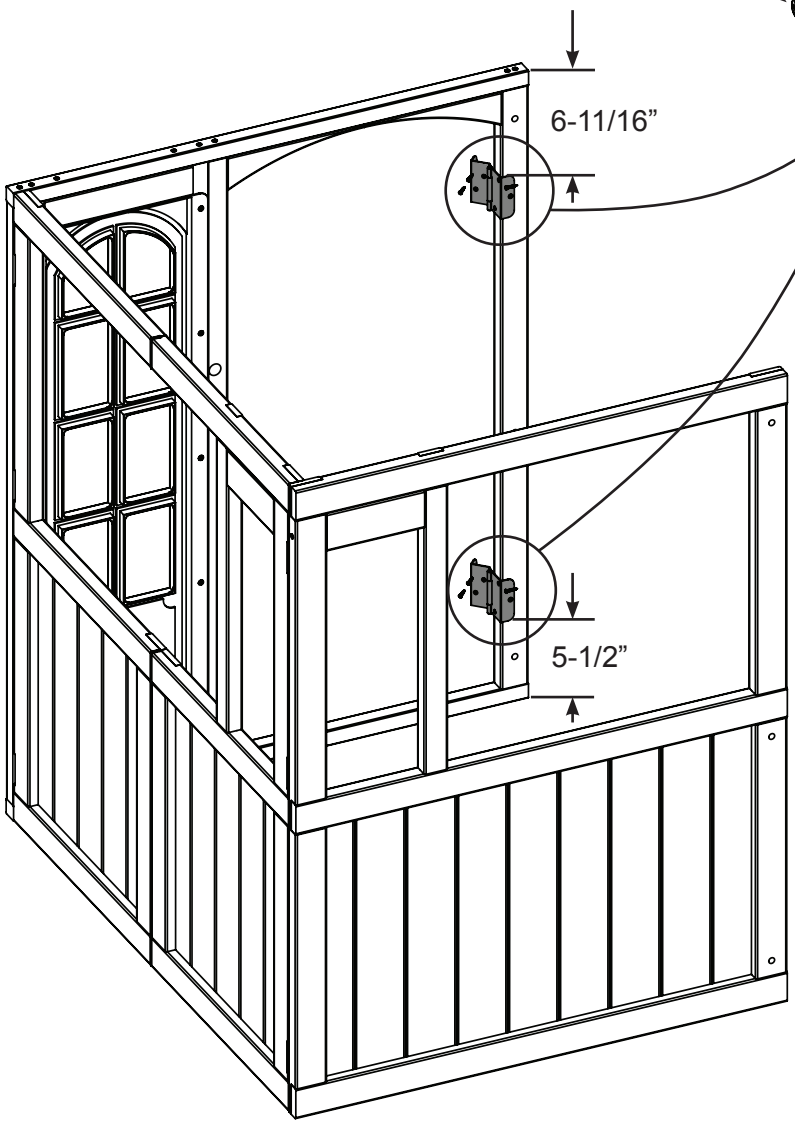

Hardware

6 x (S39) #5 x 3/4” Wood Screw

Other Parts

2 x Factory Mount Door Hinge

Step 2: Frame Assembly
Part 3

E: Connect Panels A and B using 6 (H2) ¼" x 2" Hex Bolts (with flat washer, lock washer and t-nut) making sure that the hex bolts are installed from inside out on the front wall panel as shown in Fig. 2.5. and 2.6.

Fig. 2.6

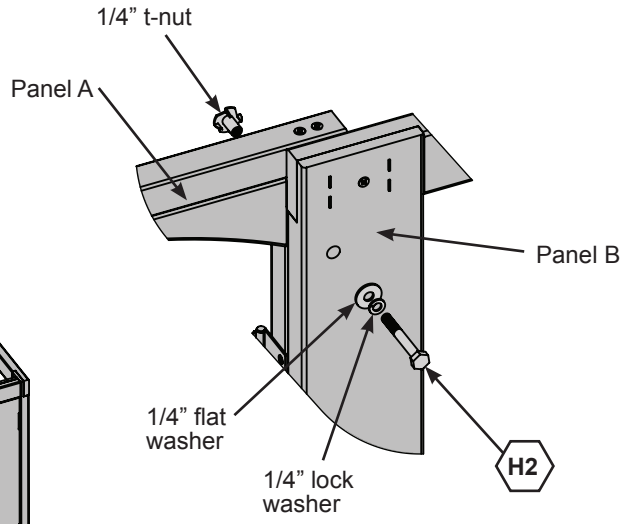

Fig. 2.5

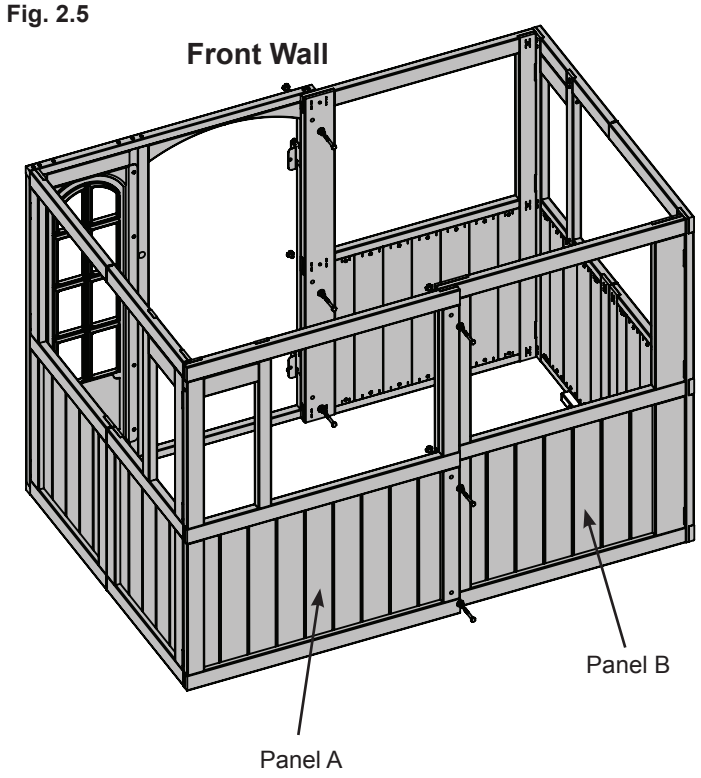

Hardware

6 x (H2) 1/4 x 2" Hex Bolt (with 1/4" lock washer, 1/4" flat washer and 1/4" t-nut)

Step 2: Frame Assembly
Part 4

F: Attach 1 (023) Panel Tie to Front Door Panel and Back Wide Panel with 4 (S15) #8 x 1-3/4” Wood Screws per board. (Fig. 2.7)

G: Attach 1 (024) Long Tie to (023) Panel Tie and Front Wall Panel using 4 (S15) #8 x 1-3/4” Wood Screws ensuring that ends are flush. Repeat for Back Wall Panel. (Fig. 2.7)

Fig. 2.7

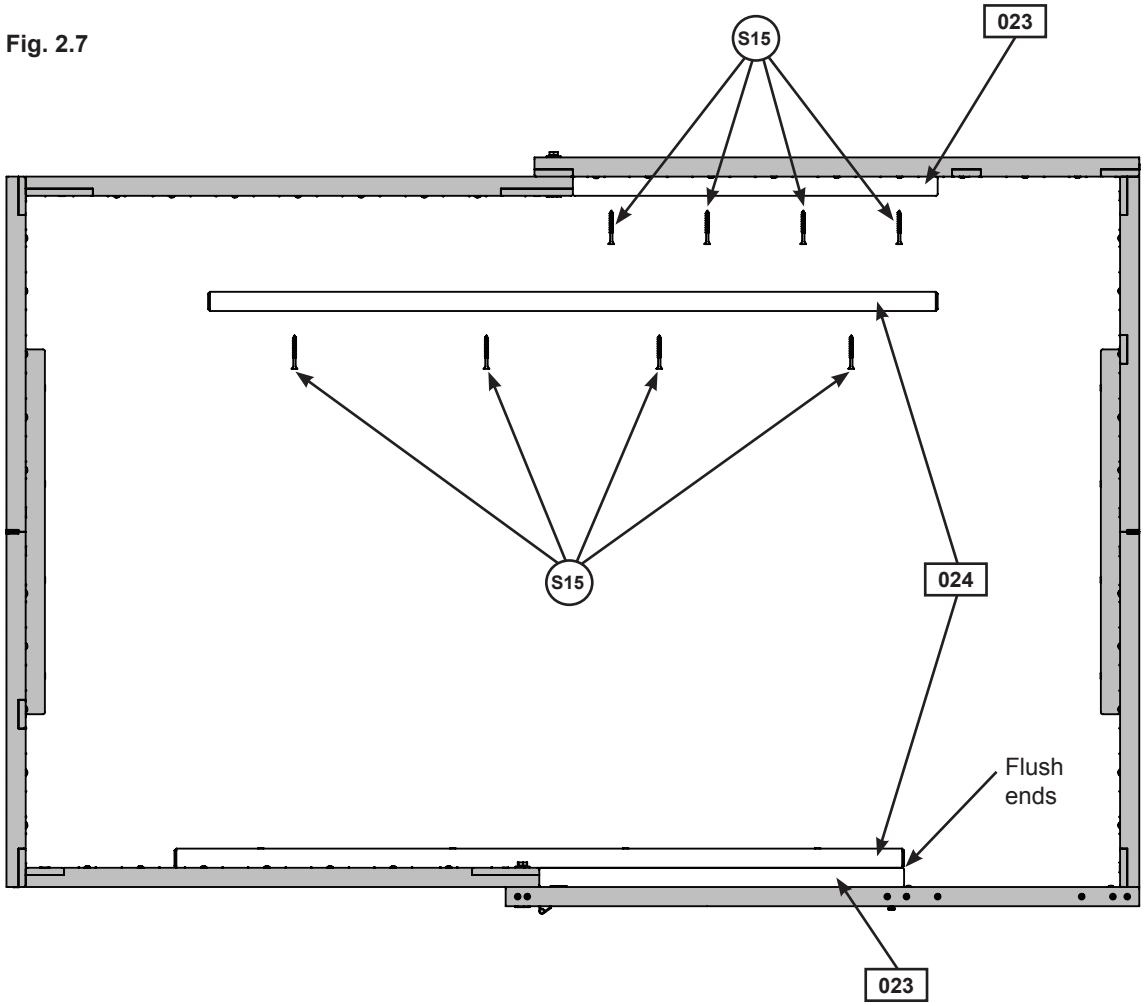

Wood Parts

2 x [023] Panel Tie 1 x 1 x 19”

2 x [024] Long Tie 1 x 1 x 38”

Hardware

16 x (S15) #8 x 1-3/4” Wood Screw

Step 3: Attach Soffits

It is important to note hole orientations for the following steps.

A: Flush to the inside face of the Left Side Wall, centre 1 (031) Soffit and attach with 4 (S20) #8 x 1-3/8" Wood Screws. Notice the 2 unused holes on the outside as shown in fig. 3.1 and 3.2.

B: Flush to the inside face of the Right Side Wall panel center 1 (034) Soffit Wide and attach using 4 (S20) #8 x 1-3/8" Wood Screws.

C: On the Front Wall and Back wall, tight to the (031) Soffit and flush to the inside face of each wall attach 1 (032) Soffit Long to each wall using 6 (S20) #8 x 1-3/8" Wood Screws per board. Note hole orientations. (Fig. 3.1 and 3.2)

D: Tight to the (032) Soffit Longs and flush to the outside face of each wall attach 1 (033) Soffit Short per wall using 3 (S20) #8 x 1-3/8" Wood Screws per board.

Fig. 3.1

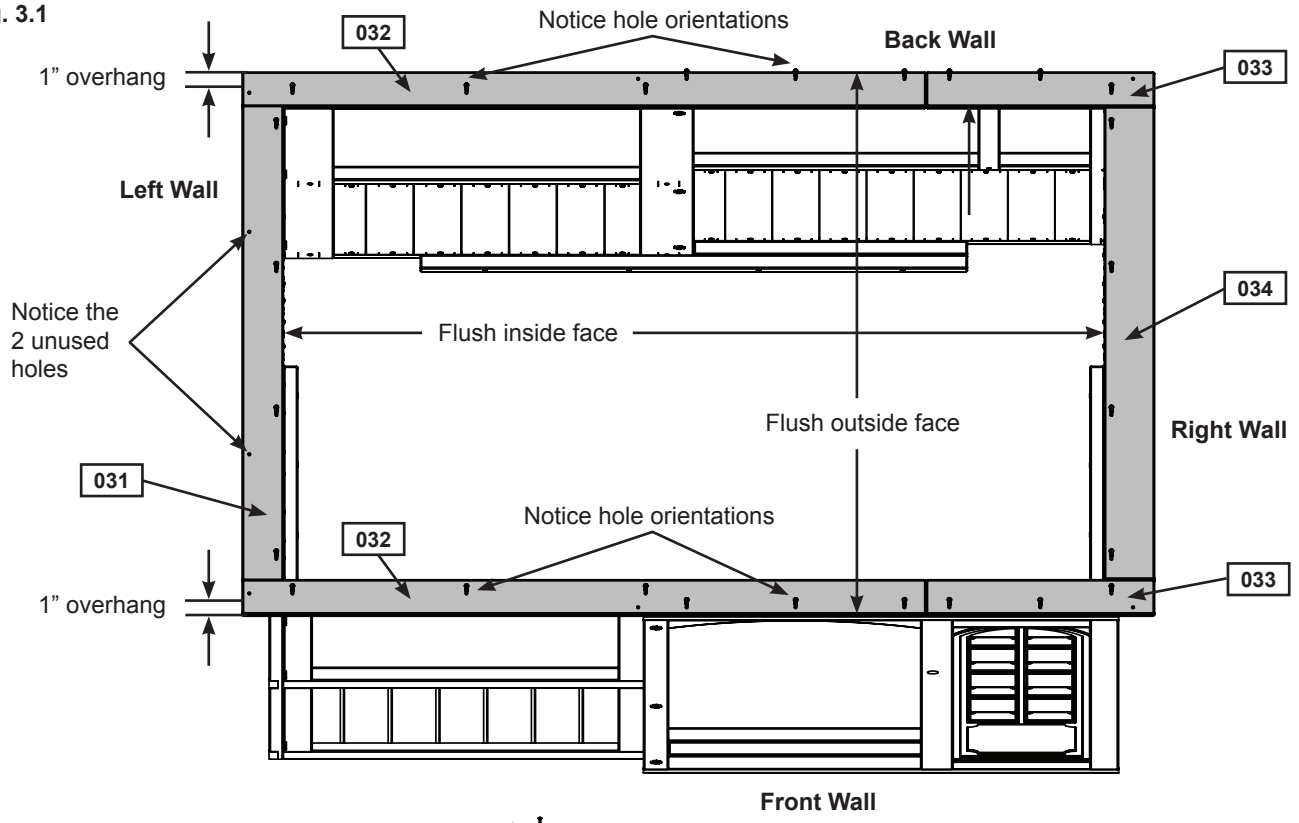

Fig. 3.2

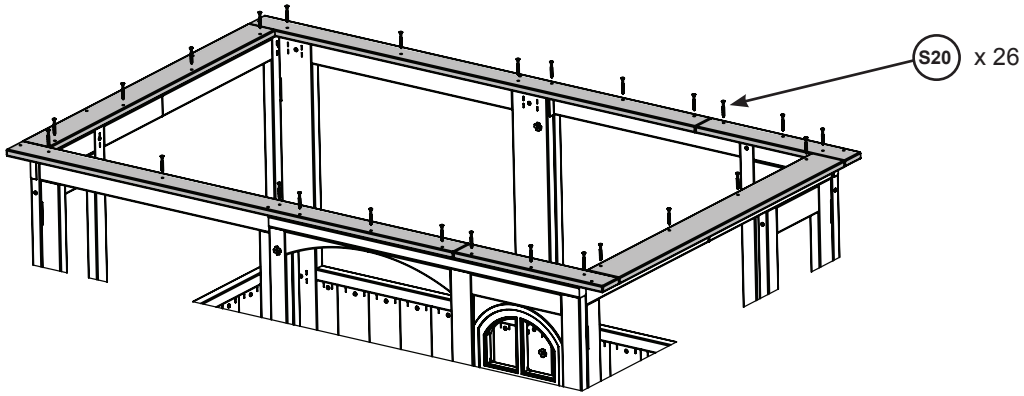

Wood Parts

- 1 x 031 Soffit 5/8 x 2-7/8 x 34"
- 2 x 032 Soffit Long 5/8 x 2-1/2 x 47-1/2"
- 2 x 033 Soffit Short 5/8 x 2-1/2 x 15-7/8"
- 1 x 034 Soffit Wide 5/8 x 3-1/2 x 34"

Hardware

- 26 x S20 #8 x 1-3/8" Wood Screw

Step 4: Café Assembly

A: Place (041) Table Top A in the opening of the Left Side Wall Panel so the grooves are tight to the wall and attach with 3 (S15) #8 x 1-3/4" Wood Screws. Repeat step to attach (042) Table Top B to Back Wall Panel and (043) Table Top C to Right Side Wall Panel. (Fig. 4.1 and 4.2)

B: Centred and tight to the bottom of each Table Top attach 1 (044) Table Support with 2 (S15) #8 x 1-3/4" Wood Screws on the top and from underneath with 4 (S11) #8 x 2" Wood Screws. (fig. 4.3)

Fig. 4.1

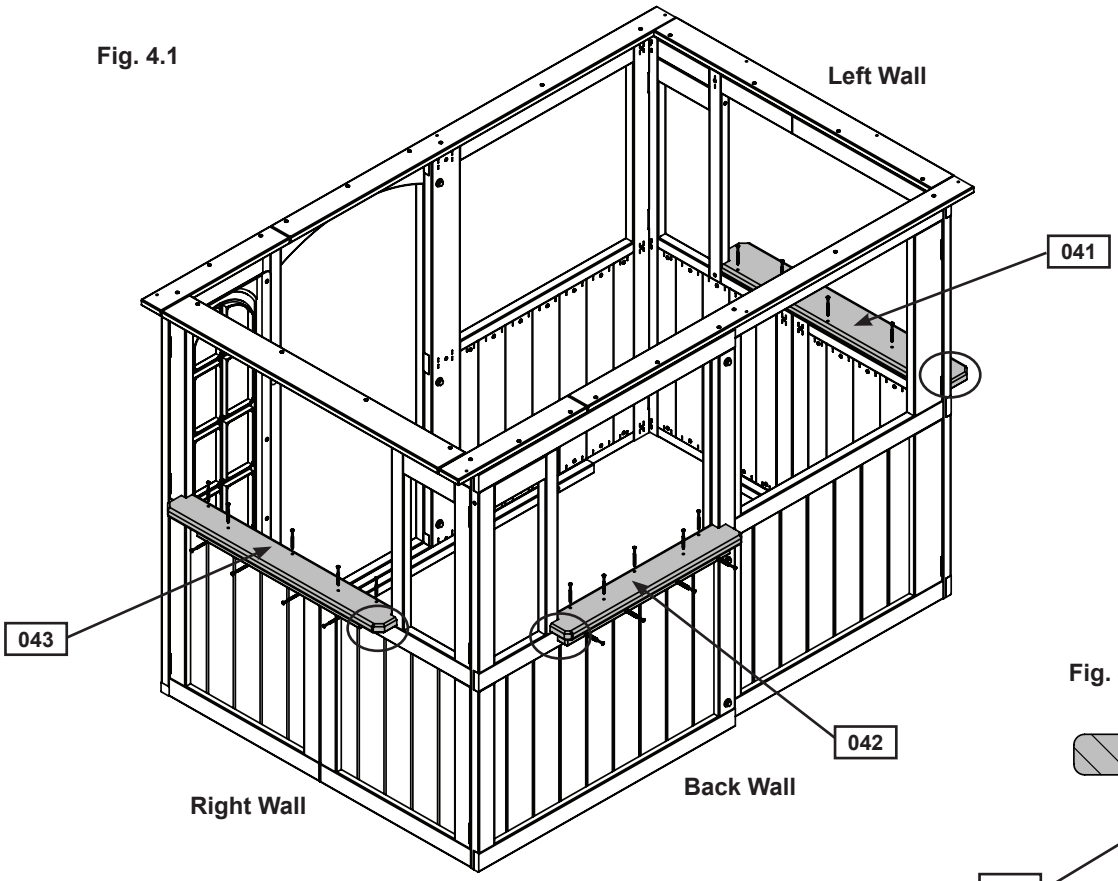

Fig. 4.2

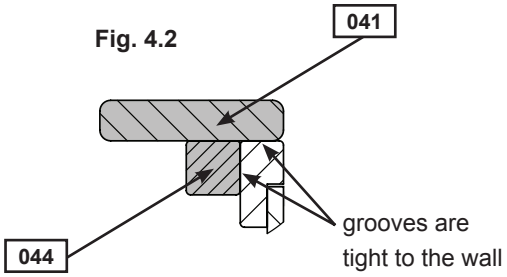

Fig. 4.3

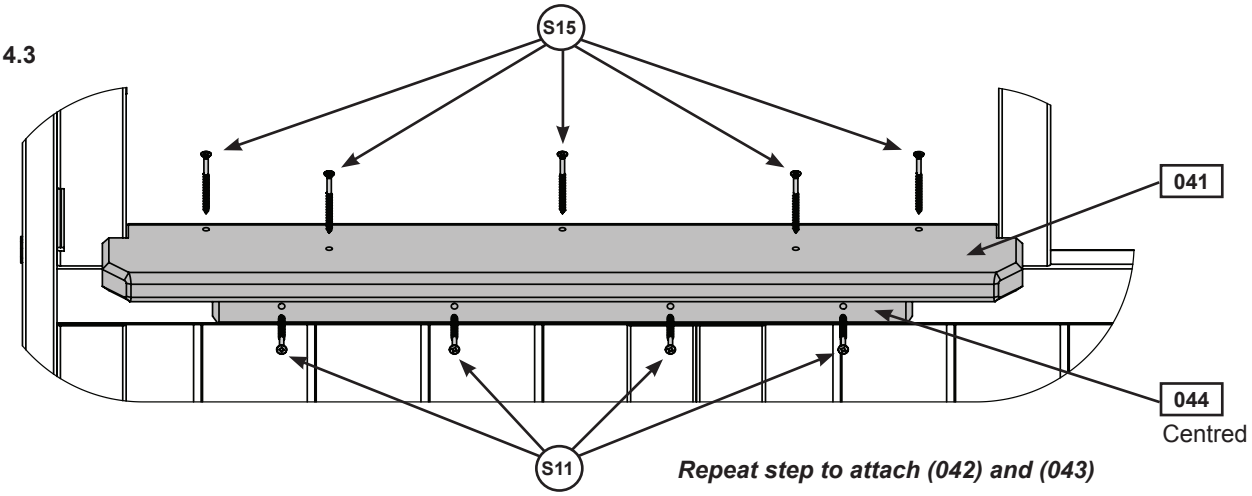

Repeat step to attach (042) and (043)

Wood Parts

- 1 x 041 **Table Top A 15/16 x 4-1/4 x 28-1/8"**
- 1 x 042 **Table Top B 15/16 x 3-1/4 x 21-3/4"**
- 1 x 043 **Table Top C 15/16 x 3-1/4 x 26-5/8"**
- 3 x 044 **Table Support 1-1/4 x 1-1/4 x 20-1/4"**

Hardware

- 12 x (S11) **#8 x 2" Wood Screw**
- 15 x (S15) **#8 x 1-3/4" Wood Screw**

Step 5: Attach Café Accessories
Part 1

A: From inside the assembly place 1 Clock Chalk Sign in the side opening of each Side Wall Panel so the top is tight to the opening and attach with 6 (S37) #7 x 5/8" Pan Screws per sign. Repeat for Back Wall Panel. Reverse signs as desired. (Fig. 5.2)

Fig. 5.1

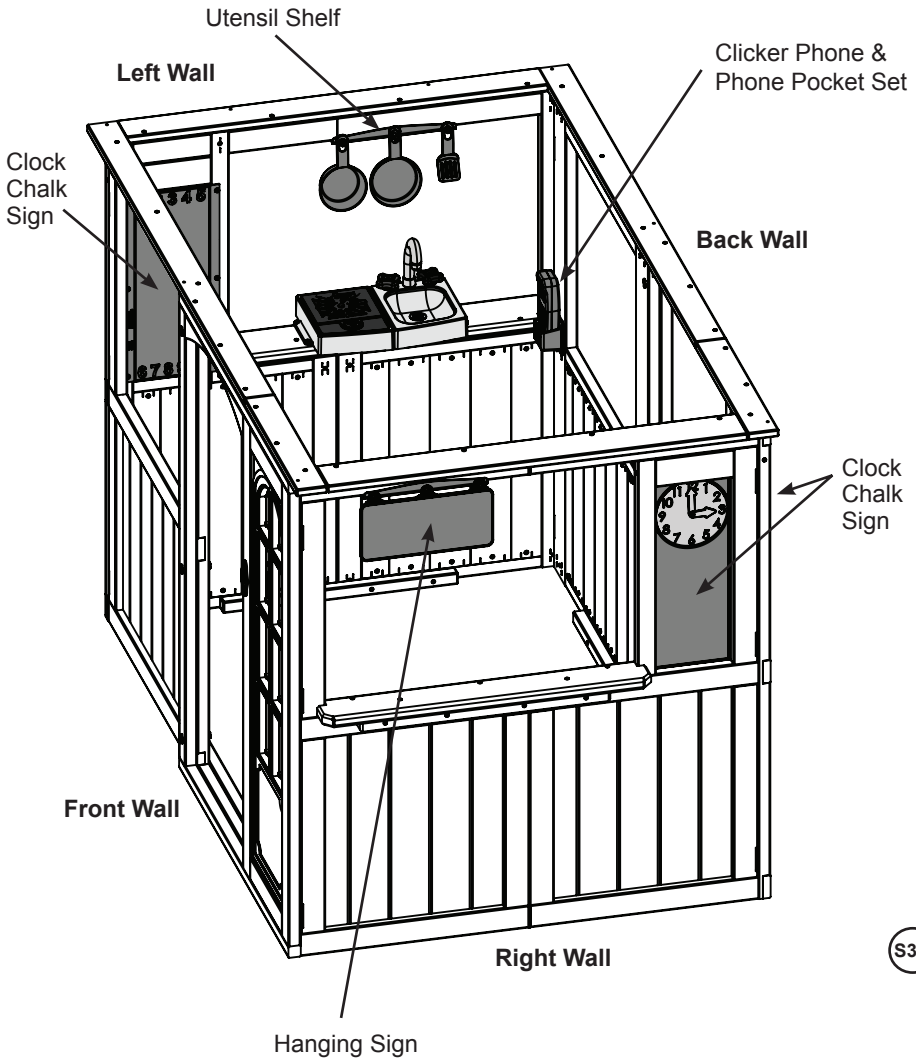

Fig. 5.2

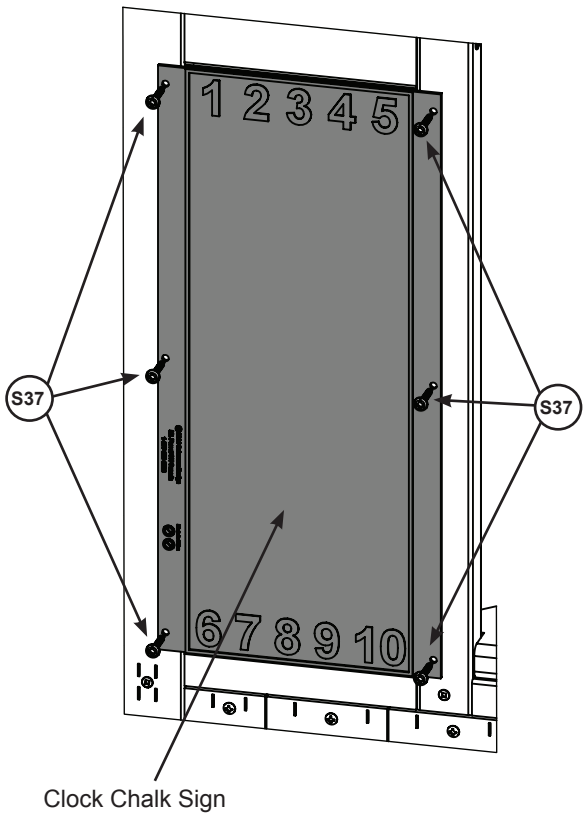

Repeat for Back Wall Panel.

Hardware

18 x (S37) #7 x 5/8" Pan Screw

Other Parts

3 x Chalk Clock Sign

Step 5: Attach Café Accessories Part 2

B: From inside the assembly to the left of the window opening on the Back Wall Panel attach 1 Clicker Phone (with holder) using 2 (S37) #7 x 5/8” Pan Screws. (Fig. 5.3)

C: On the Right Side Wall Panel from inside the assembly place 1 Hanging Sign to either the left or right side of the window opening and attach with 2 (S0) #8 x 7/8” Truss Screws. (Fig. 5.4)

Fig. 5.3

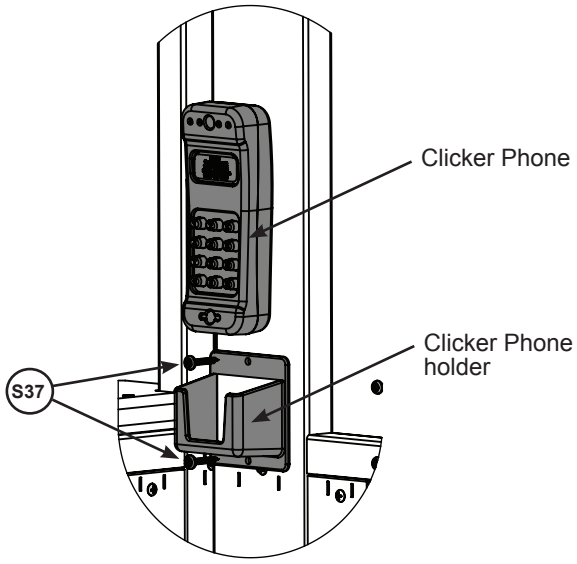

Refer to Step 5 Part 1 for Location

Fig. 5.4

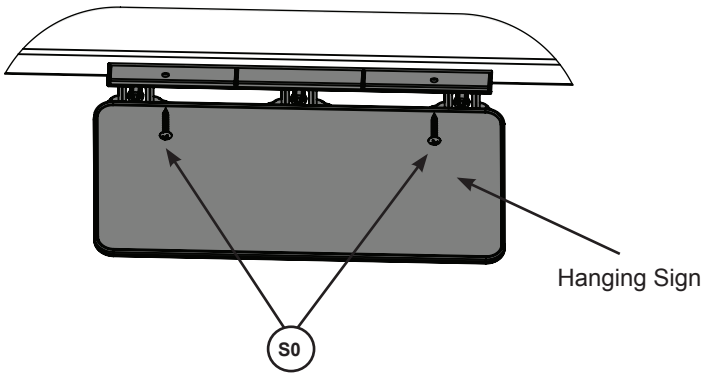

Hardware

2 x (S37) #7 x 5/8” Pan Screw

2 x (S0) #8 x 7/8” Truss Screw

Other Parts

1 x Clicker Phone & Phone Pocket Set

1 x Hanging Sign

Step 5: Attach Café Accessories Part 3

D: From inside the assembly, centred in the large opening of the Left Side Wall Panel attach Utensil Shelf with 2 (S0) #8 x 7/8" Truss Screws. (Fig. 5.5 and 5.6)

E: Attach Pot, Pan and Spatula to the Utensil Shelf. (Fig 5.6)

Refer to Step 5 Part 1 for Location

Fig. 5.5

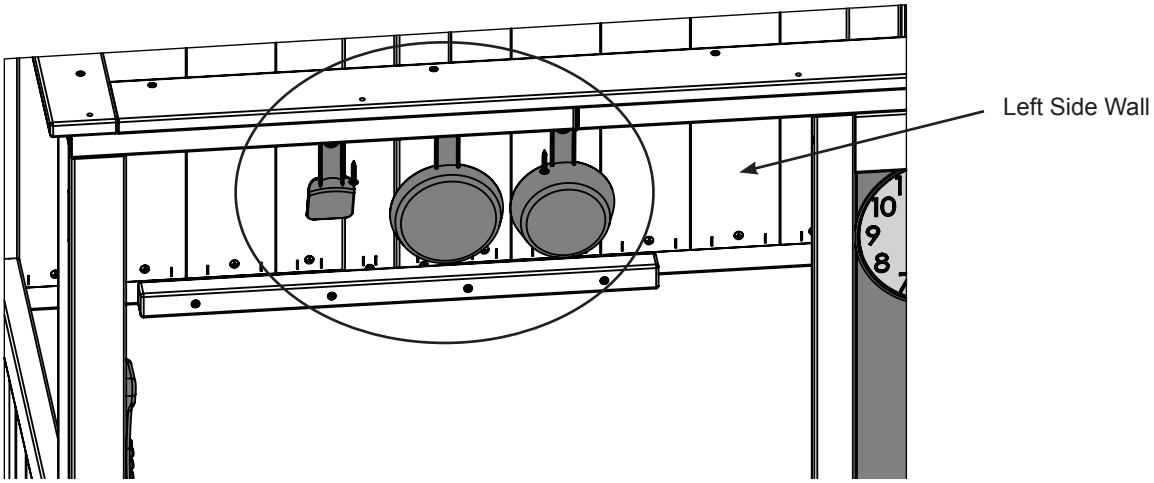

Fig. 5.6

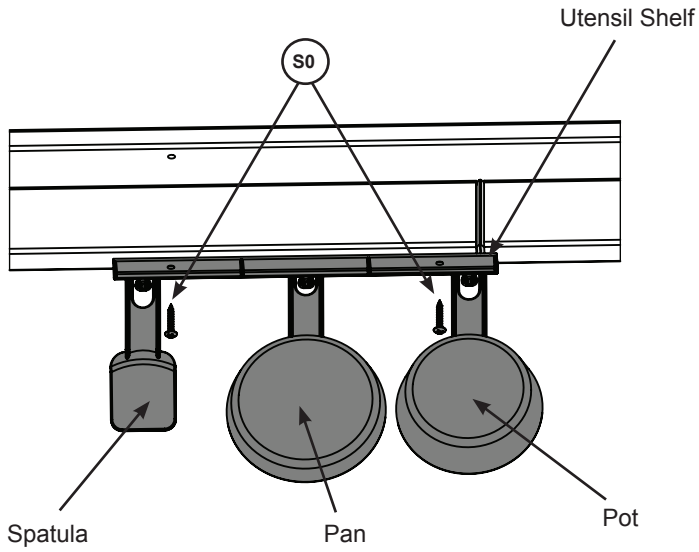

Hardware

2 x (S0) #8 x 7/8" Truss Screw

Other Parts

1 x Utensils Shelf
1 x Pot
1 x Pan
1 x Spatula

Step 5: Attach Café Accessories
Part 4

F: Place Faucet and 2 Sink Knobs in opening of Sink and attach Sink Knobs with included hardware. (Fig 5.7)
Important: Use a hand held screw driver and DO NOT over tighten.

G: Centre Sink and Cook Top on (041) Table Top A in the Left Side Wall Panel and attach using 6 (S0) #8 x7/8" Truss Screws. (Fig 5.8 and 5.9)

Fig. 5.7

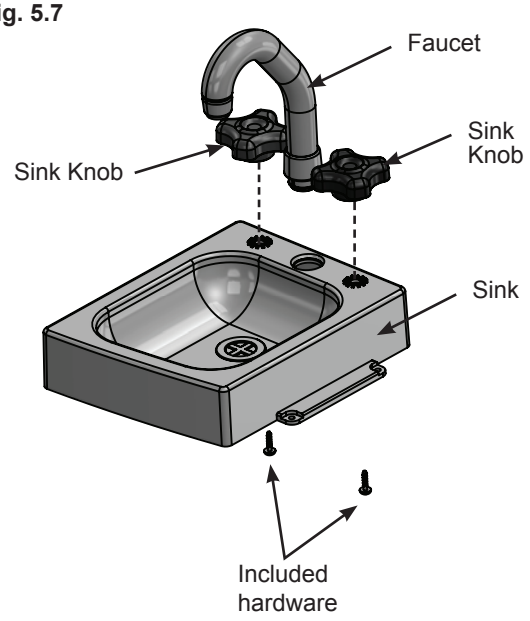

Refer to Step 5 Part 1 for Location

Fig. 5.8

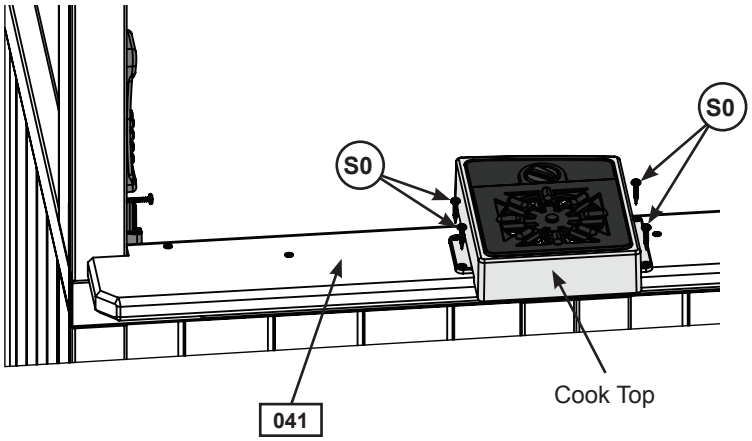

Fig. 5.9

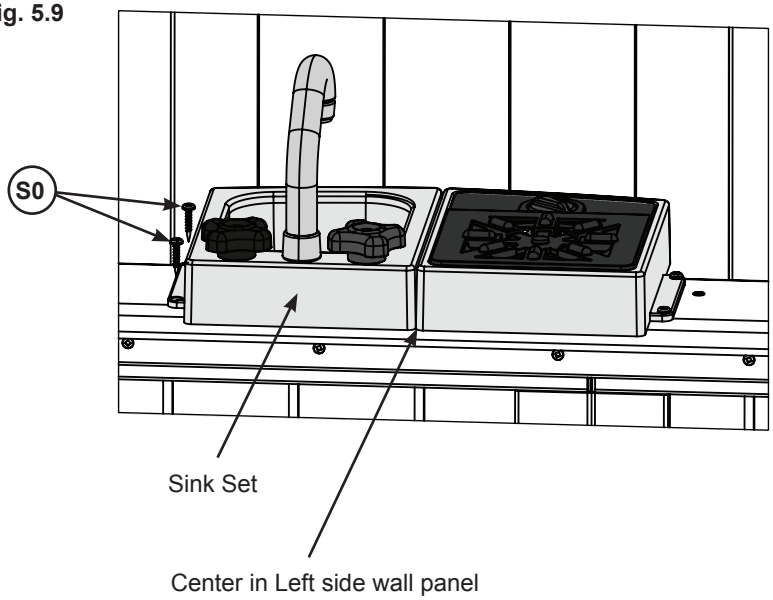

Hardware

6 x (S0) #8 x 7/8" Truss Screw

Other Parts

1 x Kitchen Set
Includes:
1 x Cook Top
1 x Sink Set

Step 5: Attach Café Accessories
Part 5

Note: Install 2 AAA/LR03 batteries in Doorbell 2 prior to attaching to assembly. To replace batteries remove back cover on Doorbell 2, remove both batteries, insert 2 new batteries ensuring the proper polarity is observed then replace back cover.

H: From inside the assembly insert Doorbell 2 into the hole in the Door Wall and attach with 2 (S0) #8 x 7/8" Truss Screws. (fig. 5.10 and 5.11)

I: On the outside of the assembly place Doorbell Trim over the hole in the Door Wall so when you press it the doorbell rings then attach with 2 (S37) #7 x 5/8" Pan Screws as shown in fig. 5.10.

Fig. 5.10

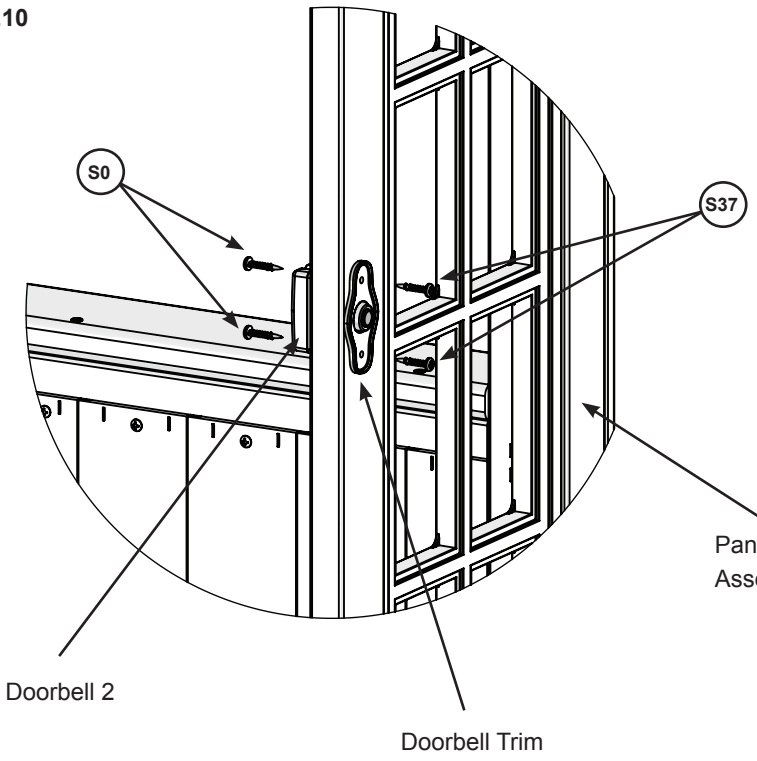

Fig. 5.11
Inside View

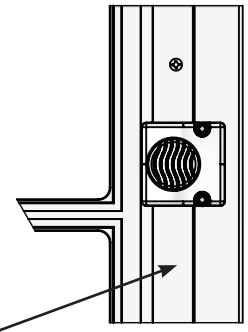

Hardware

2 x (S37) #7 x 5/8" Pan Screw
2 x (S0) #8 x 7/8" Truss Screw

Other Parts

1 x Door Bell 2
1 x Door Trim

Step 6: Bay Window Assembly
Part 1

A: From outside the assembly place the Bay Window Bottom in the large opening of the Front Wall Panel and Back Panel as shown in fig. 6.1. Attach using 4 (S37) #7 x 5/8" Pan Screws per panel.

Fig. 6.1

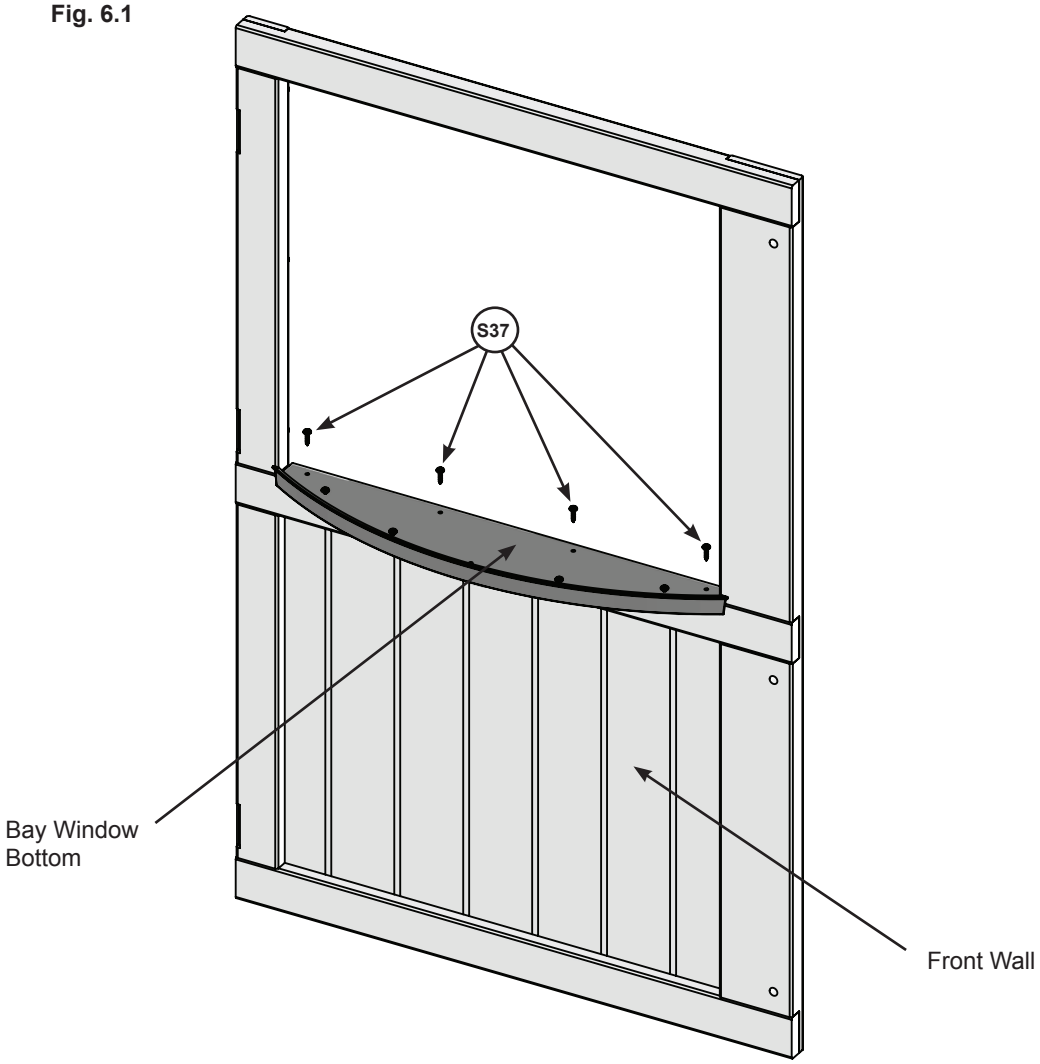

Hardware

8 x (S37) #7 x 5/8" Pan Screw

Other Parts

2 x Folding Bay Window Bottom

Step 6: Bay Window Assembly Part 2

B: Bend Folding Bay Window so it is curved and from inside the assembly place into the opening on top of the Bay Window Bottom as shown in fig. 6.2 and 6.4. Attach with 4 (S37) #7 x 5/8" Pan Screws. The sides of the Folding Bay Window Insert should fit tight to the inside of the wall panel.

C: Attach the sides of the Folding Bay Window to the insides of the Side Wall with 3 (S37) #7 x 5/8" Pan Screws per side. (Fig. 6.3 and 6.5)

Fig. 6.2

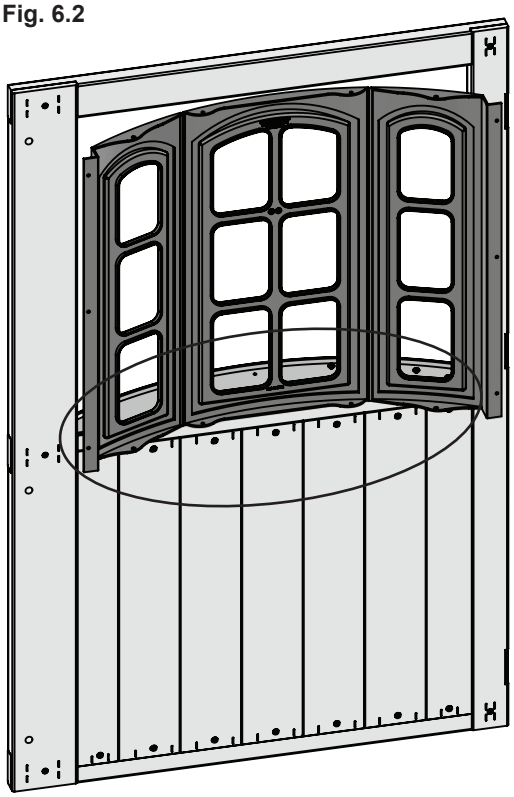

Fig. 6.3

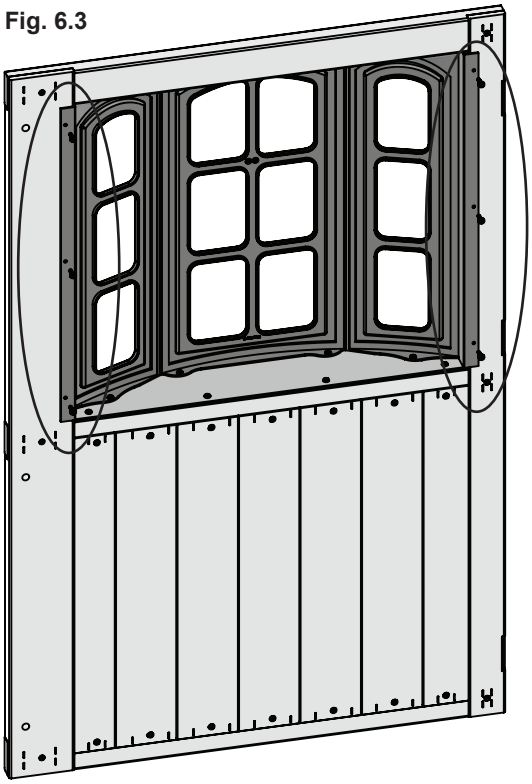

Fig. 6.4

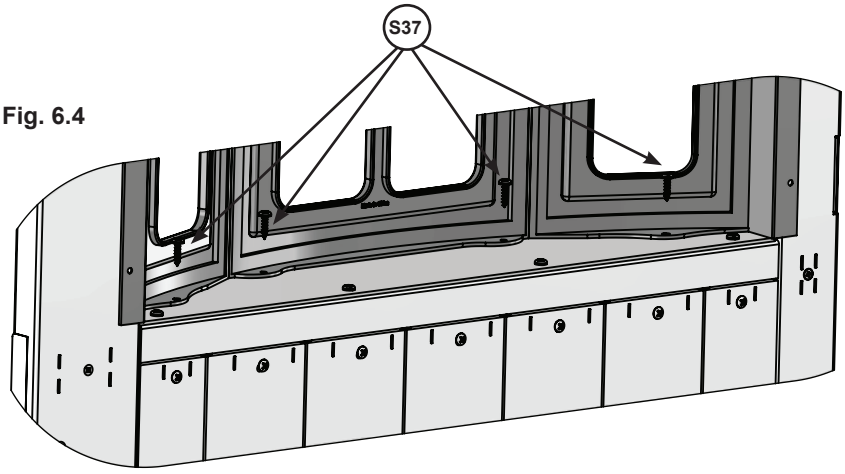

Fig. 6.5

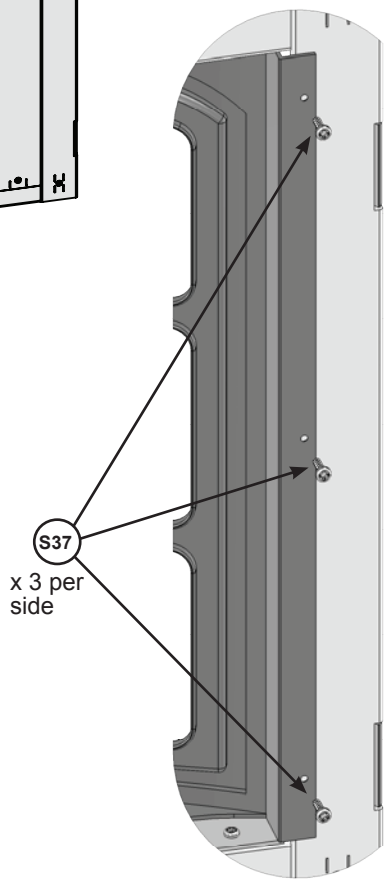

Hardware

20 x (S37) #7 x 5/8" Pan Screw

Other Parts

2 x Folding Bay Window

Step 6: Bay Window Assembly Part 3

D: From outside the assembly place Bay Window Roof on top of Folding Bay Window and under the wall panel then attach to Folding Bay Window with 4 (S37) #7 x 5/8" Pan Screws. (Fig 6.6, 6.7 and 6.8)

E: Attach Bay Window Top to the wall panel with 4 (S37) #7 x 5/8" Pan Screws. (Fig. 6.8)

F: Repeat Step 6 for Back Wall Folding Bay Window.

Fig. 6.6

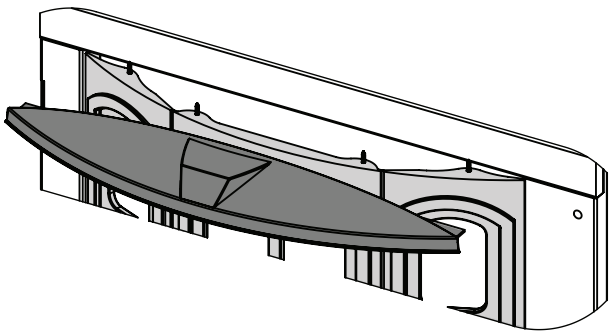

Fig. 6.7

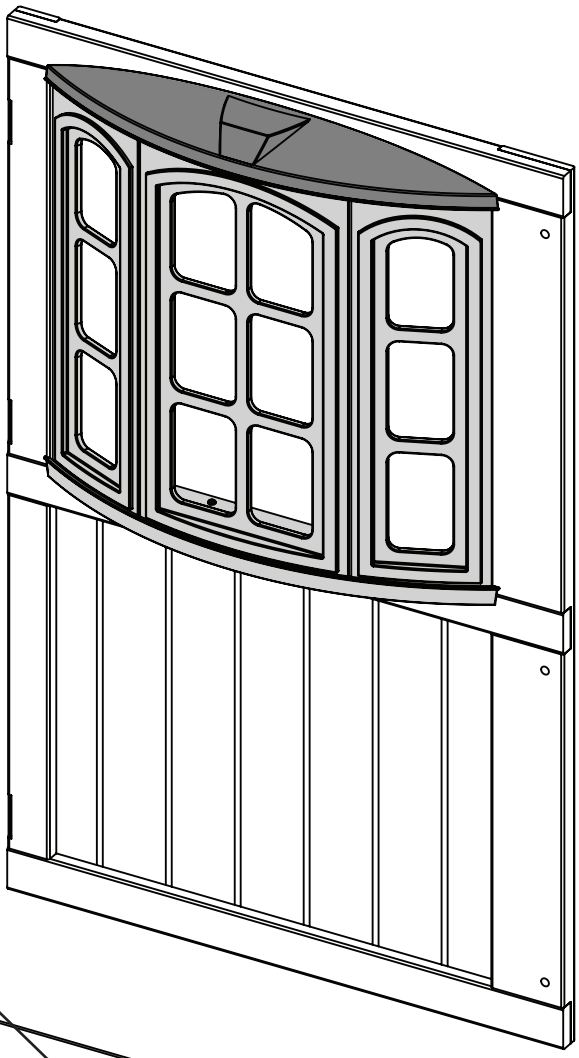

Fig. 6.8

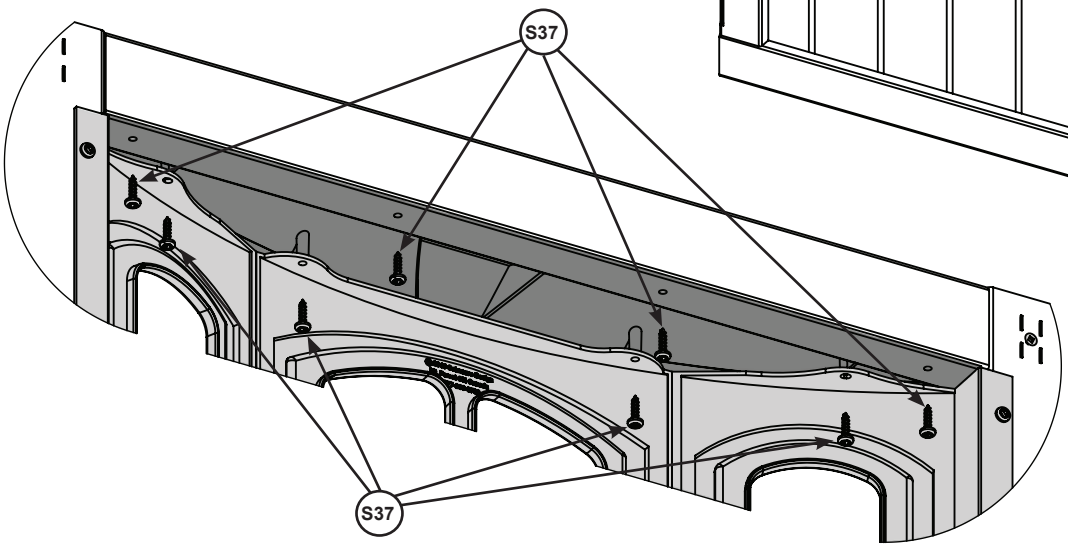

Hardware

16 x (S37) #7 x 5/8" Pan Screw

Other Parts

2 x Folding Bay Window Roof

Step 7: Roof Support

A: Attach one (071) Roof End to a second (071) Roof End at peak using 1 (S3) #8 x 2-1/2" Wood Screw. (Fig. 7.1)

B: Place 1 (072) Roof Support Assembly between the Roof Ends so the bottom of the Roof Support Assembly is flush with the bottoms of each Roof End. Attach using 2 (S3) #8 x 2-1/2" Wood Screws (Fig. 7.1)

C: Repeat step to make 3 assemblies.

Fig. 7.1

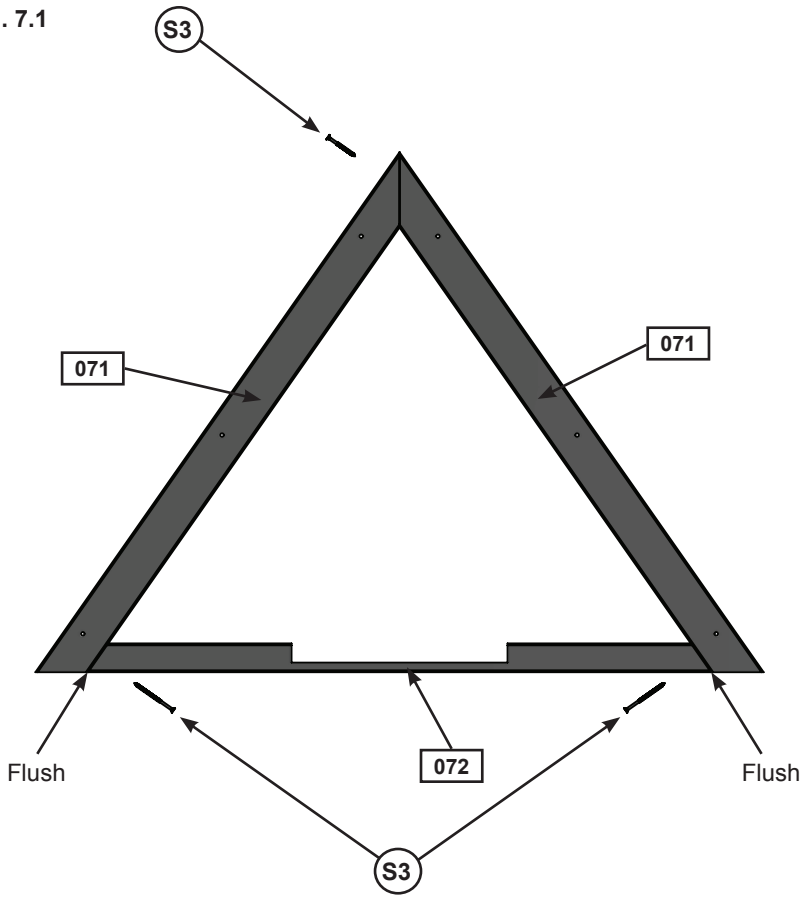

Wood Parts

6 x 071 **Roof End 1 x 2-1/4 x 33-1/16"**

3 x 072 **Roof Support Assembly 1 x 1-1/2 x 32-7-16"**

Hardware

9 x S3 **#8 x 2-1/2" Wood Screw**

Step 8: Roof Assembly
Part 1

A: Place (081) Full Roof Panel on its edge so that the overlap is at the top and have a helper hold it.

B: Lean (082) Partial Roof Panel Left and (083) Partial Roof Panel Right up against the (081) Full panel so they meet tightly together in the center. The (081) Full Panel should overlap both Partial Panels. Attach Full Panel to Partial Panels using 4 (S11) #8 x 2" Wood Screws. (Fig. 8.1 and 8.2)

Fig. 8.1

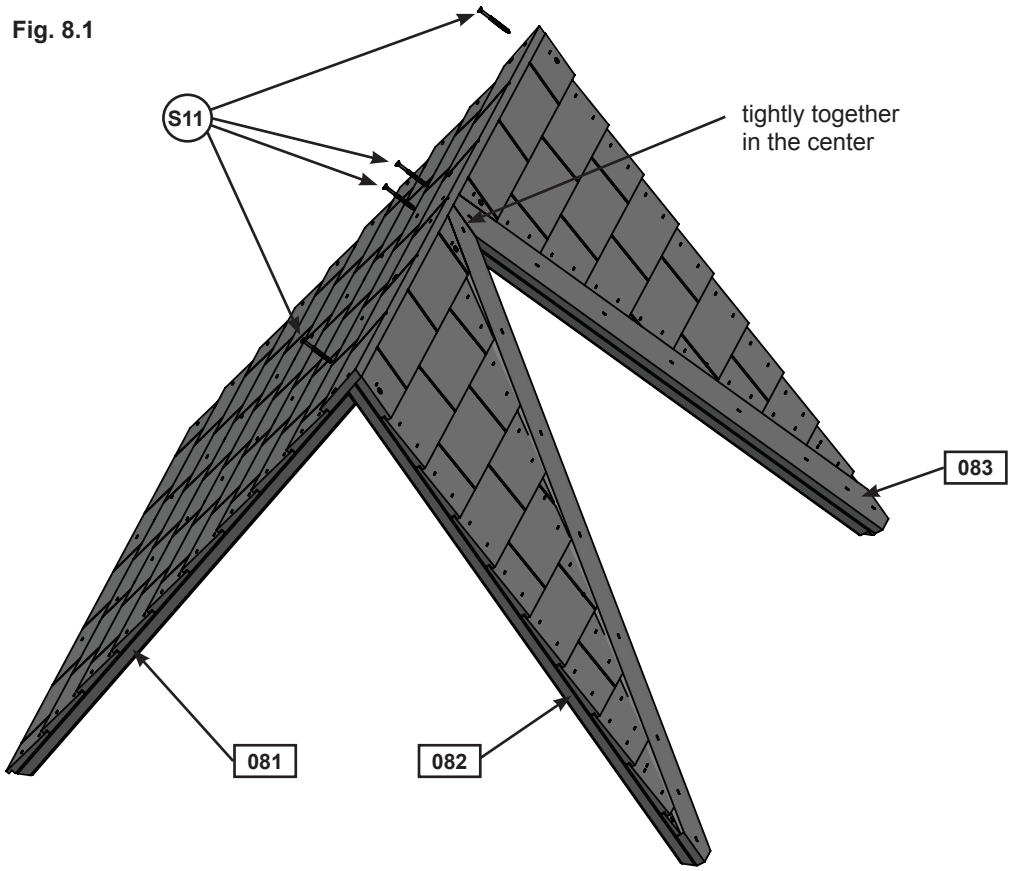

Fig. 8.2

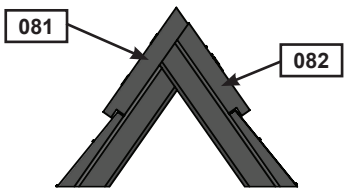

Notice Overlap

Wood Parts

- 1 x 081 **Roof Panel - Front Full 1-1/4 x 32-59/64 x 37"**
- 1 x 082 **Partial Roof Panel Left 1-1/4 x 18-1/2 x 32-17/64"**
- 1 x 083 **Partial Right Roof Panel 1-1/4 x 18-1/2 x 32-17/64"**

Hardware

- 4 x S11 **#8 x 2" Wood Screw**

Step 8: Roof Assembly
Part 2

C: Place 1 Roof Support against each side of the Roof Panel Assembly so the bottoms are flush and they meet at the peak. (Fig. 8.4) Attach using 6 (S11) #8 x 2" Wood Screws per End Assembly. (Fig. 8.3)

Fig. 8.3

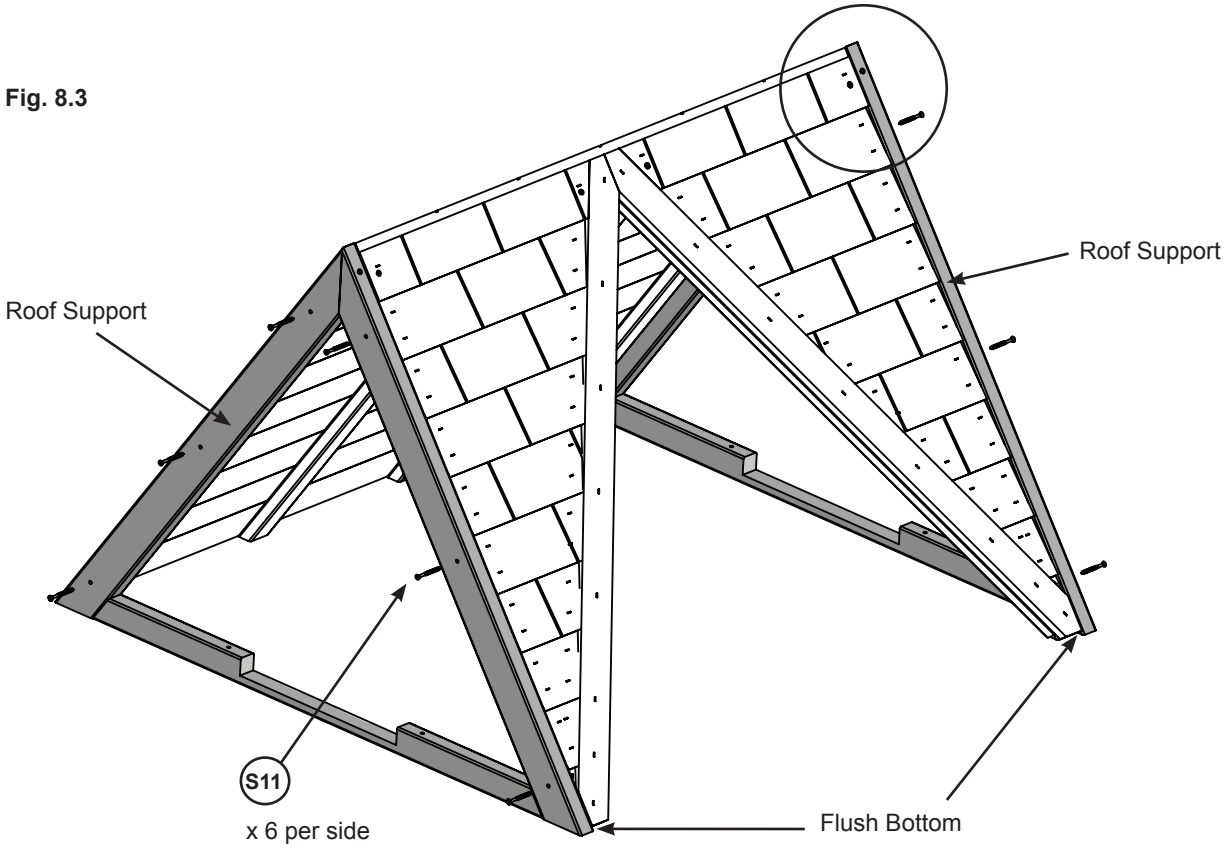

Fig. 8.4

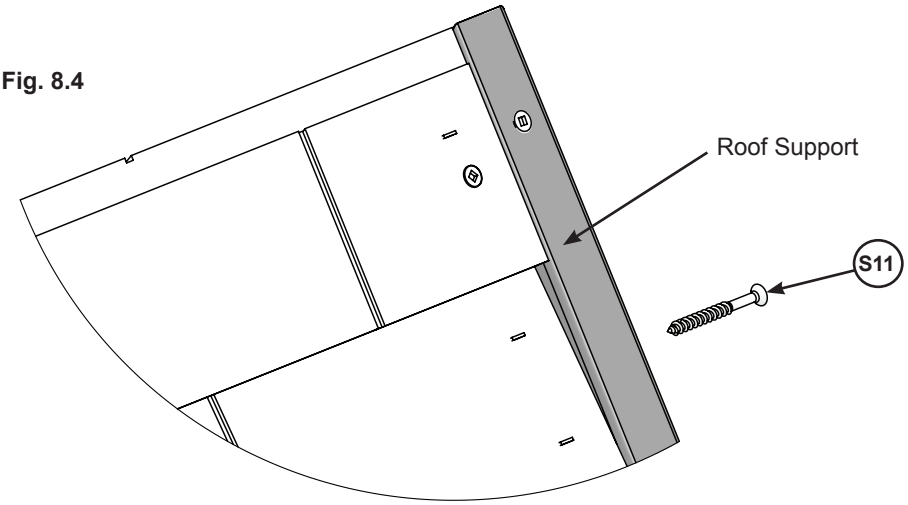

Hardware

12 x (S11) #8 x 2" Wood Screw

Step 8: Roof Assembly
Part 3

D: With a helper, lift the Roof Assembly and place it onto the far right hand side of the Playhouse so that the Roof Assembly sits flush with soffits. Attach the Roof Assembly from underneath the 4 corners using 4 (S20) #8 x 1-3/8" Wood Screws (Fig. 8.5, 8.6, 8.7, 8.8 and 8.9).

Fig. 8.5

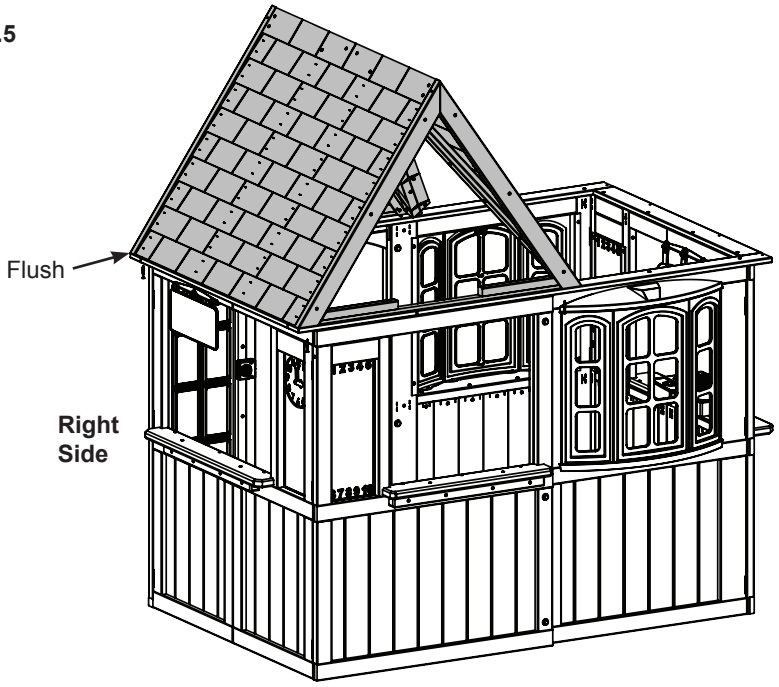

Fig. 8.6

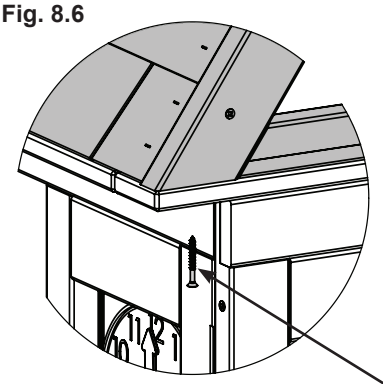

Fig. 8.8

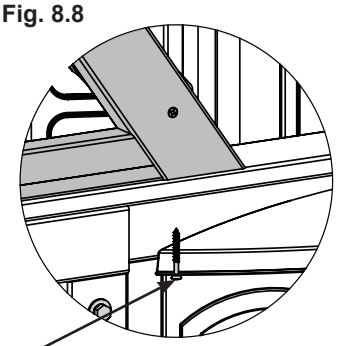

S20

Fig. 8.7
Bottom View

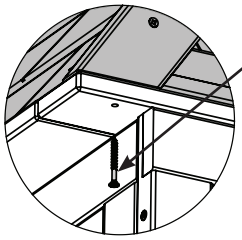

Fig. 8.9
Bottom View

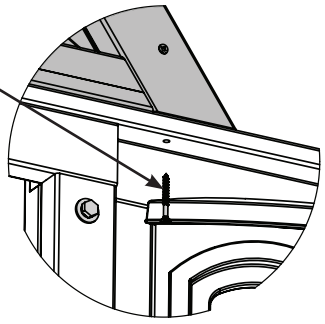

Hardware

4 x (S20) #8 x 1-3/8" Wood Screw

Step 8: Roof Assembly
Part 4

E: Use 4 (S3) #8 x 2-1/2” Wood Screws to secure (072) Roof Support Assembly. (Fig. 8.10 and 8.11)

Fig. 8.10

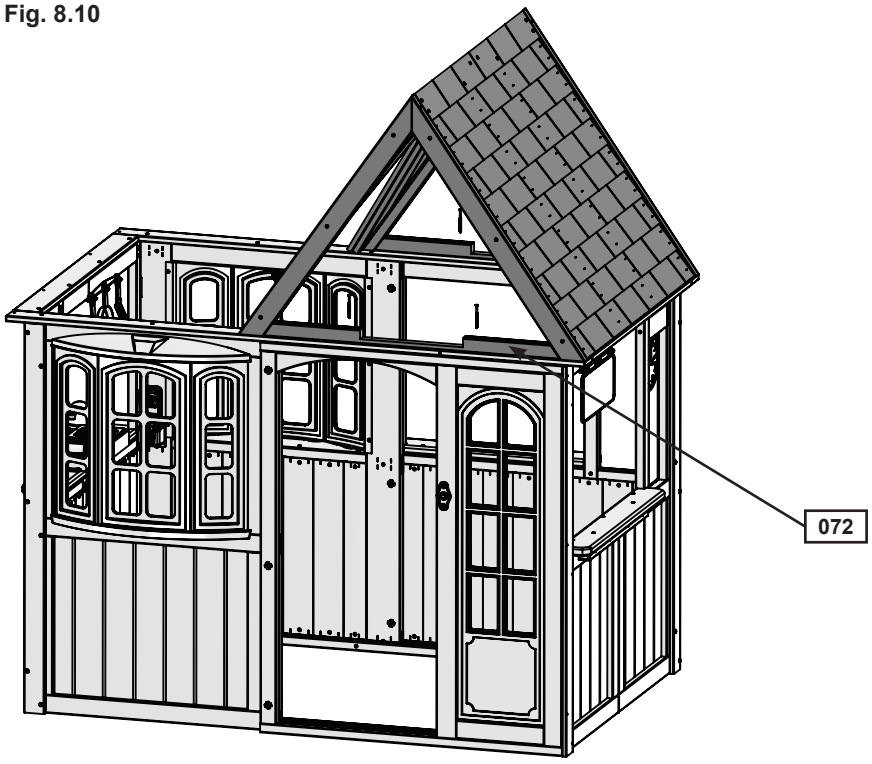

Fig. 8.11

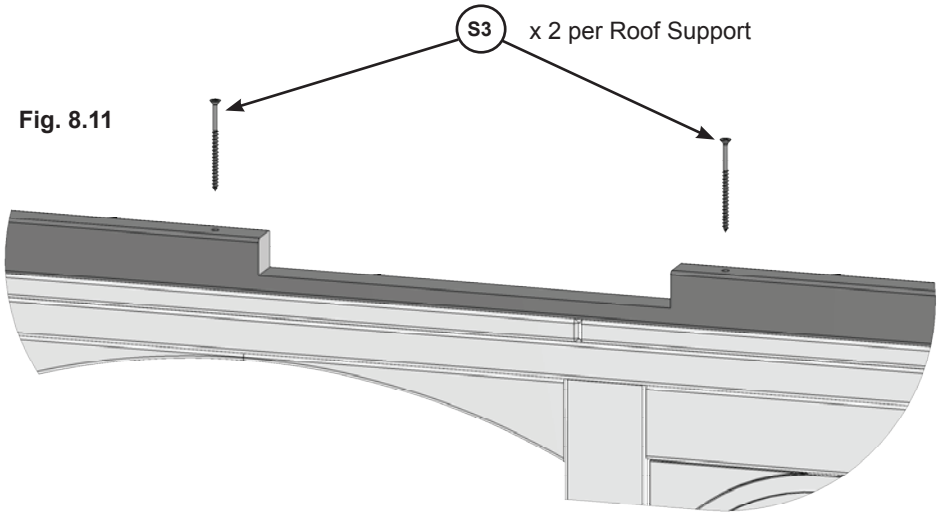

Hardware

4 x (S3) #8 x 2-1/2” Wood Screw

Step 9: Roof Valley Assembly
Part 1

A: From inside the assembly place 1 Roof Valley 3 tight against each Partial Panel so each Roof Valley extends past the outer face of the panel and attach using 9 (S37) #7 x 5/8" Pan Screws. (Fig 9.1, 9.2 and 9.3)

Fig. 9.1

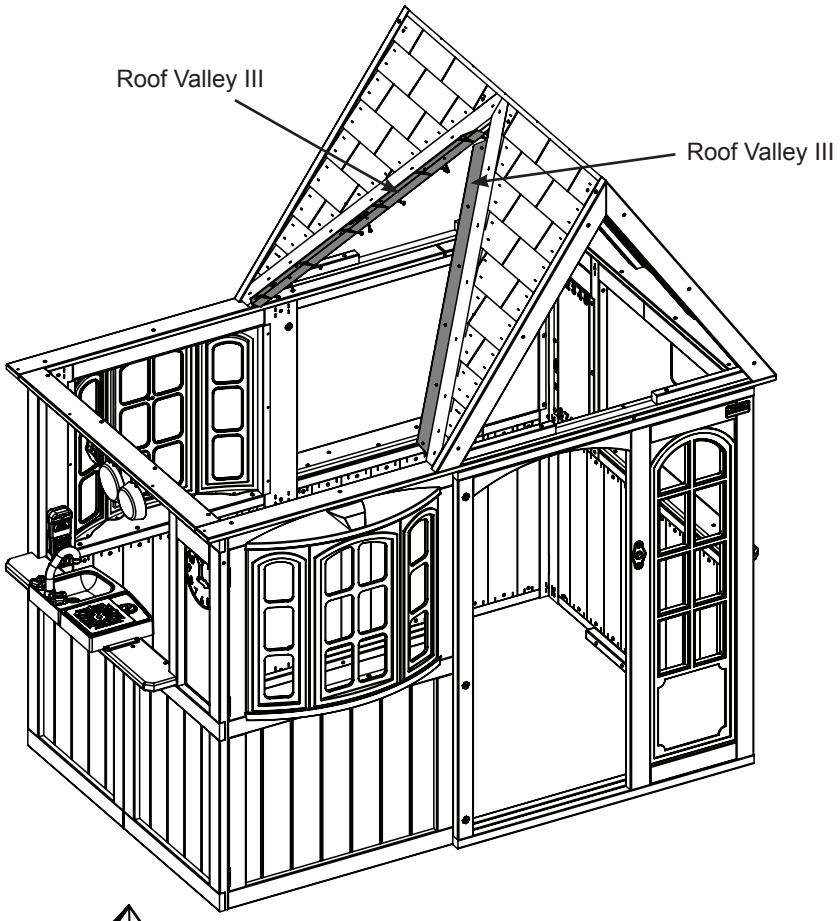

Fig. 9.2

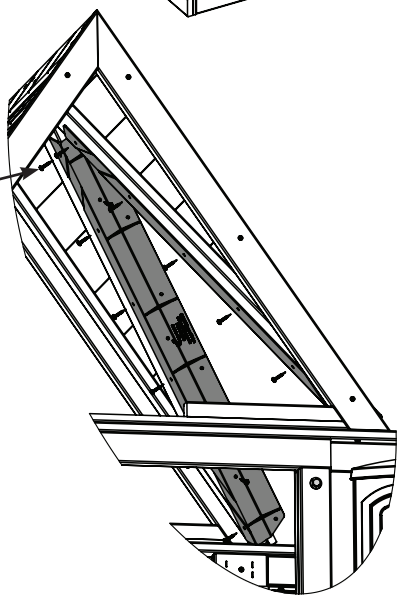

Fig. 9.3
View from underneath

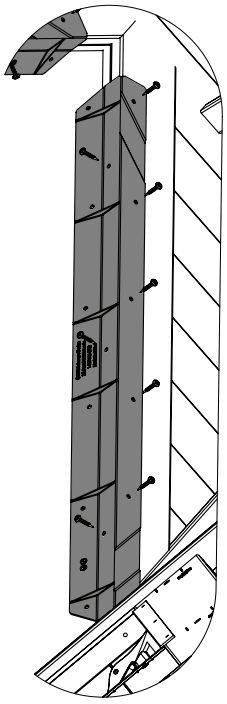

Hardware

18 x (S37) #7 x 5/8" Pan Screw

Other Parts

1 x Roof Valley III (2 Pk)

Step 9: Roof Valley Assembly Part 2

B: Attach (092) Half Roof Right Panel to (091) Half Roof Left Panel using 2 (S11) #8 x 2" Wood Screws making sure that the (092) Half Roof Right is overlapping the (091) Half Roof Left. (Fig. 9.4, 9.5 and 9.6)

Fig. 9.4

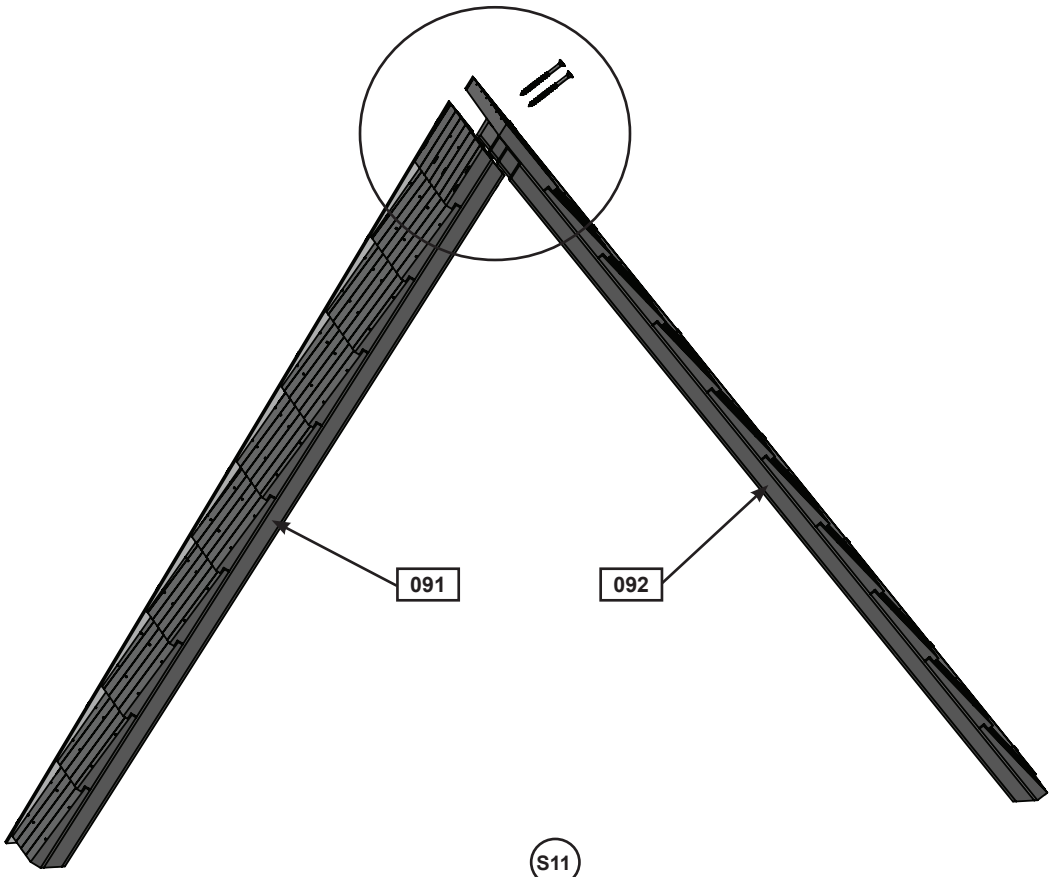

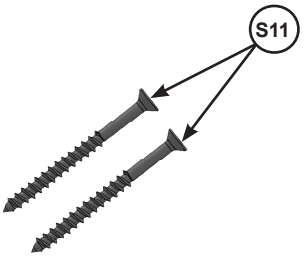

Fig. 9.5

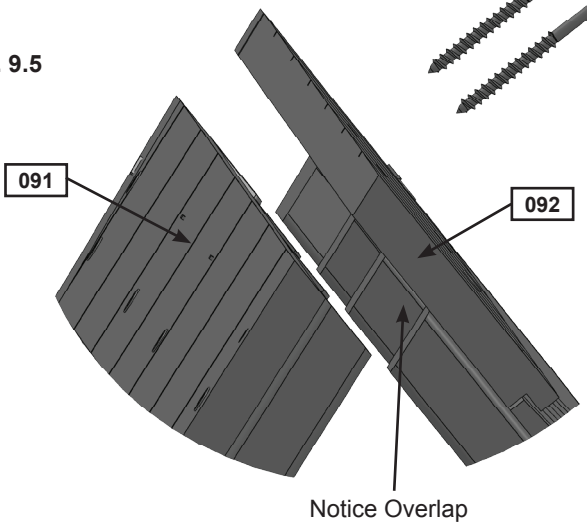

Fig. 9.6

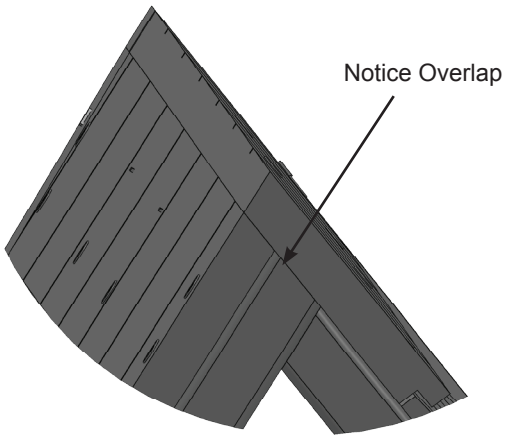

Wood Parts

1 x [091] **Half Roof Left 1-1/4 x 32-17/32 x 43-1/8"**

1 x [092] **Half Roof Right 1-1/4 x 33-1/16 x 43-5/16"**

Hardware

2 x (S11) **#8 x 2" Wood Screw**

Step 9: Roof Valley Assembly
Part 3

C: Place the Half Roof Panel Assembly onto the Playhouse so that the back of the assembly is tight to the roof assembly and rests on each Roof Valley 3. (Fig. 9.7)

D: Attach the Half Roof Panel Assembly to Roof Valley using 12 (S37) #7 x 5/8" Pan Screws. (Fig. 9.8)

Fig. 9.7

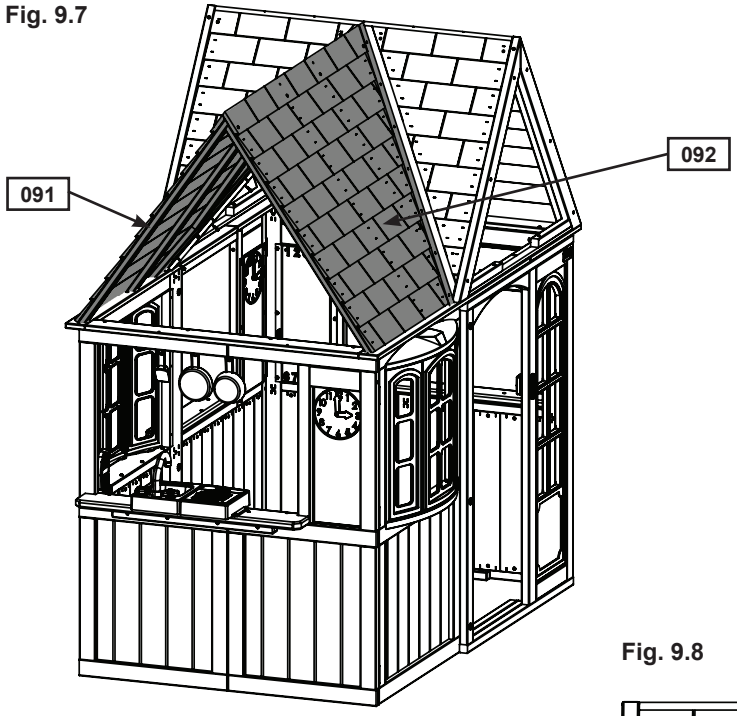

Fig. 9.8

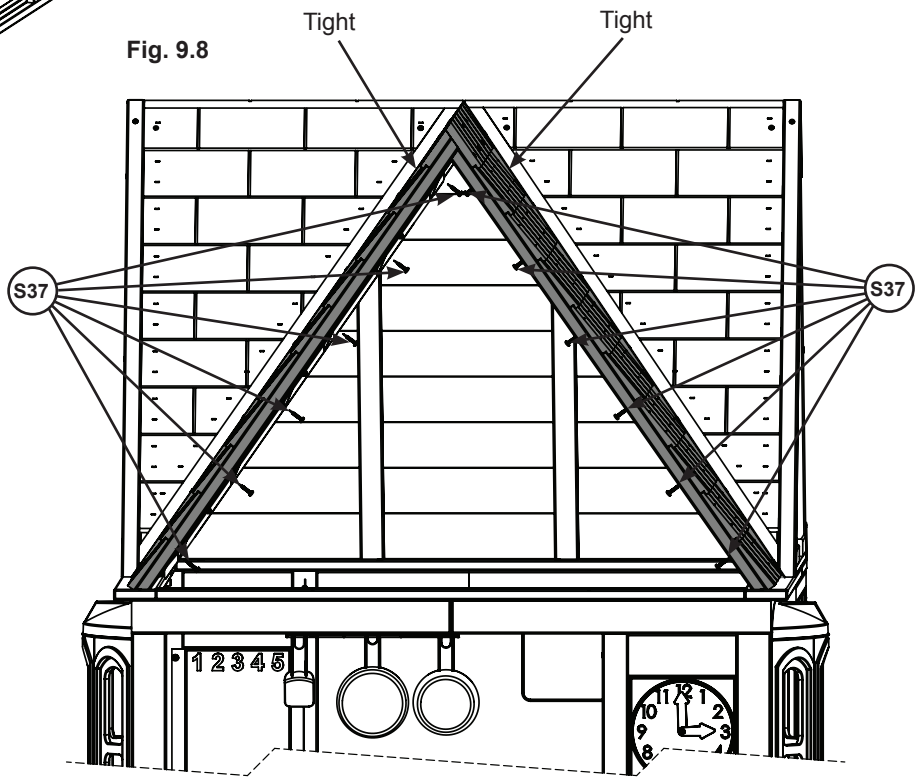

Hardware

12 x (S37) #7 x 5/8" Pan Screw

Step 9: Roof Valley Assembly
Part 4

E: Place the final Roof End Assembly against the Half Roof Panel Assembly ensuring that it is flush. Attach using 6 (S11) #8 x 2” Wood Screws in the (071) Roof Ends and 4 (S20) #8 x 1-3/8” Wood Screws from the underside of the soffits into the (072) Roof Support Assembly and (071) Roof Ends. (Fig. 9.9 and 9.10)

Fig. 9.9

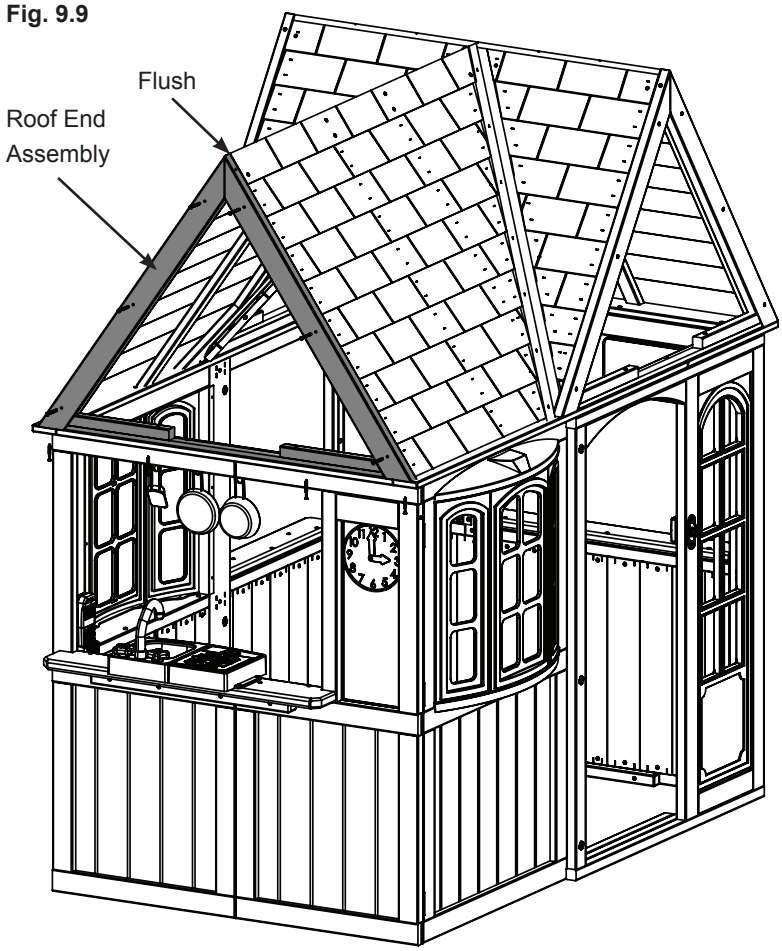

Fig. 9.10

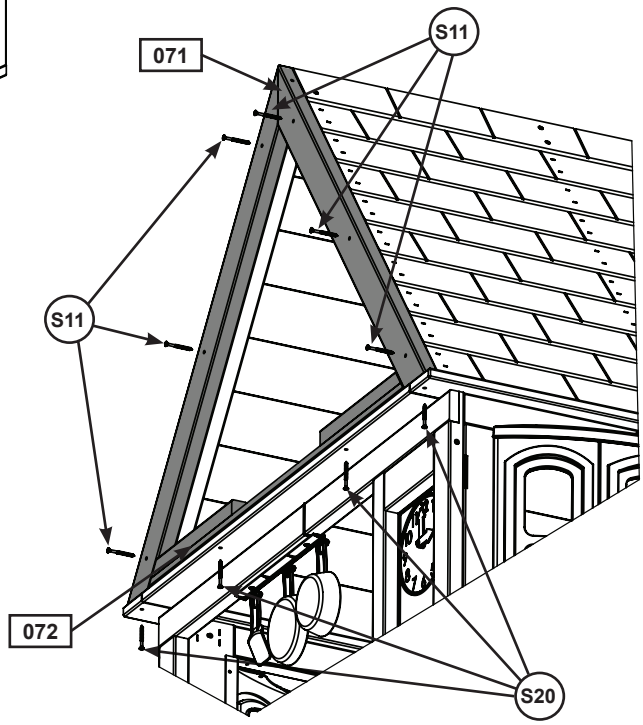

Hardware

4 x (S20) #8 x 1-3/8” Wood Screw

6 x (S11) #8 x 2” Wood Screw

Step 10: Gable Assembly
Part 1

A: From inside the assembly, tight to the top of the roof assembly attach (101) Gable Top B using 4 (S20) #8 x 1-3/8" Wood Screws. (Fig. 10.1 and 10.2)

B: Tight to (101) Gable Top B attach (102) Gable Top A with 4 (S20) #8 x 1-3/8" Wood Screws. (Fig. 10.1 and 10.2)

C: Repeat steps for remaining 2 Gables.

Fig. 10.1

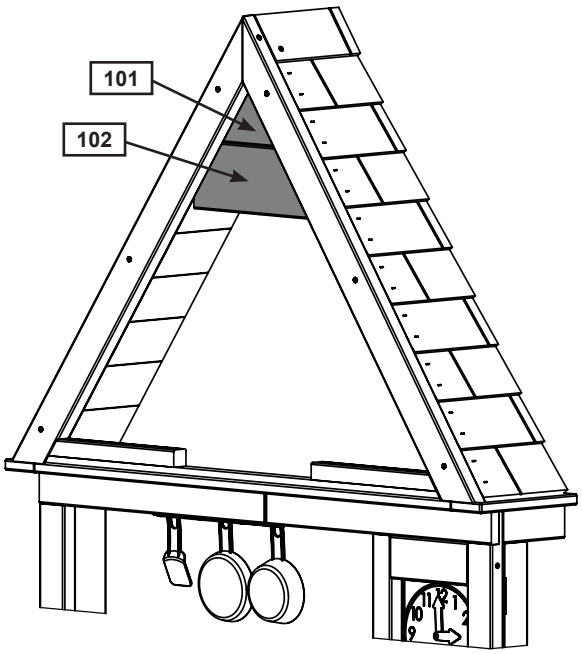

Fig. 10.2
Inside view

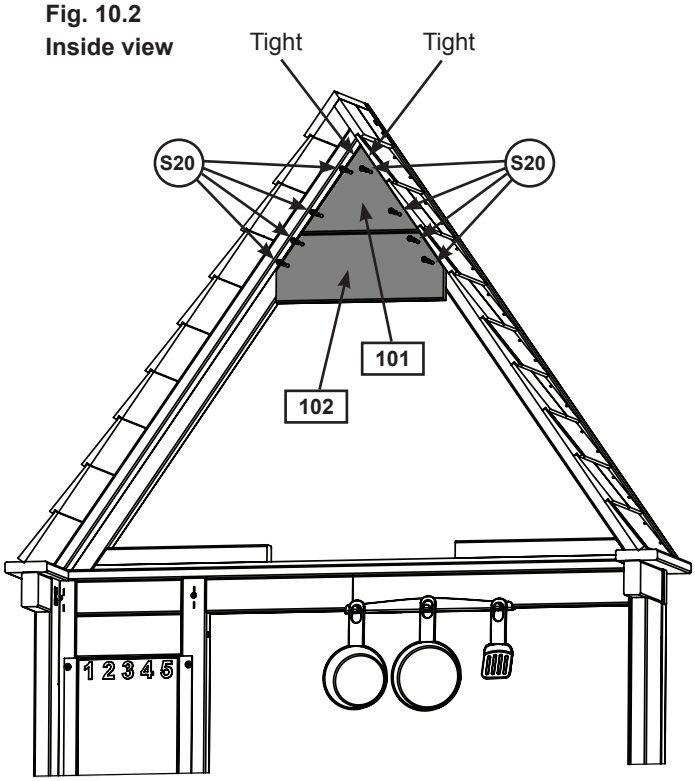

Wood Parts

3 x 101 **Gable Top B 5/8 x 5 x 7"**
3 x 102 **Gable Top A 5/8 x 4 x 10"**

Hardware

24 x (S20) **#8 x 1-3/8" Wood Screw**

Step 10: Gable Assembly
Part 2

D: Vertically, on either side of (102) Gable Top A attach 1 (103) Gable Side A with 6 (S15) #8 x 1-3/4” Wood Screws. Measure to ensure that there is a 10” opening for the window. (Fig. 10.3 and 10.4)

Fig. 10.3

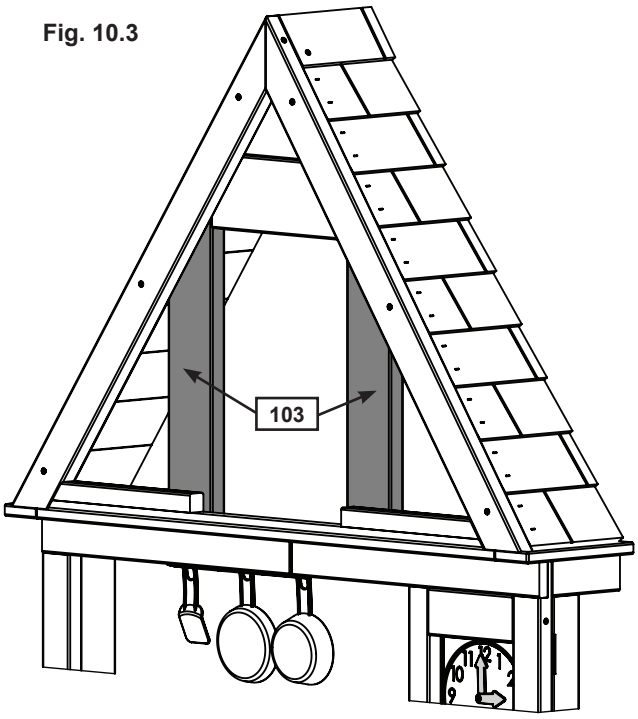

Fig. 10.4
Inside view

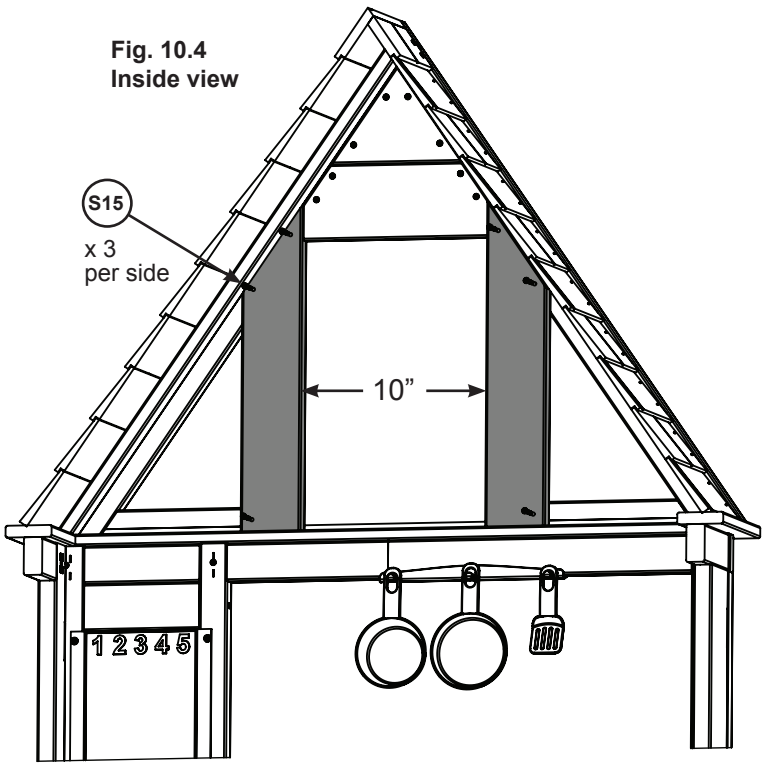

Wood Parts

6 x 103 Gable Side A 1 x 3-1/4 x 17-21/64”

Hardware

18 x S15 #8 x 1-3/4” Wood Screw

Step 10: Gable Assembly
Part 3

E: Attach remaining (104) Gable Side B and (105) Gable Side C boards using 14 (S20) #8 x 1-3/8" Wood Screws. (Fig. 10.5 and 10.6)

F: Repeat steps for remaining 2 Gables.

Fig. 10.5

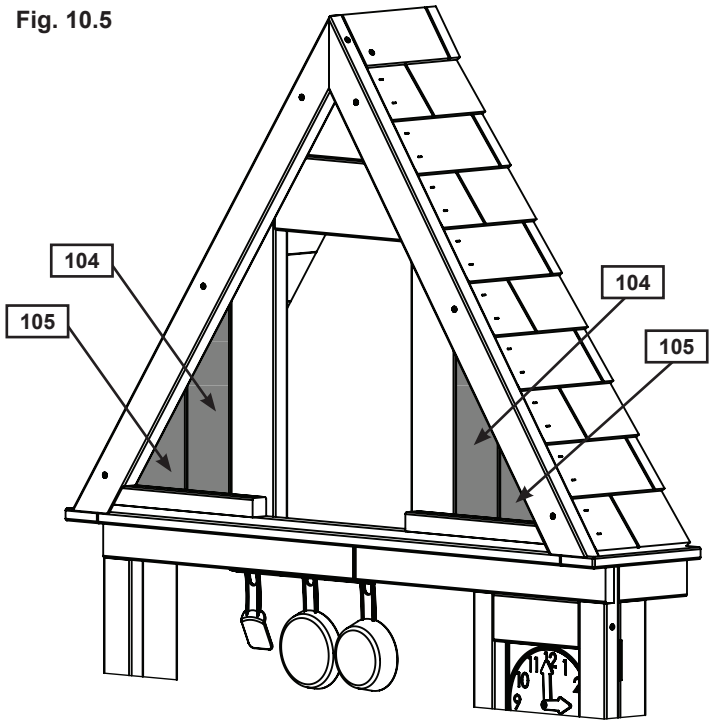

Fig. 10.6
Inside view

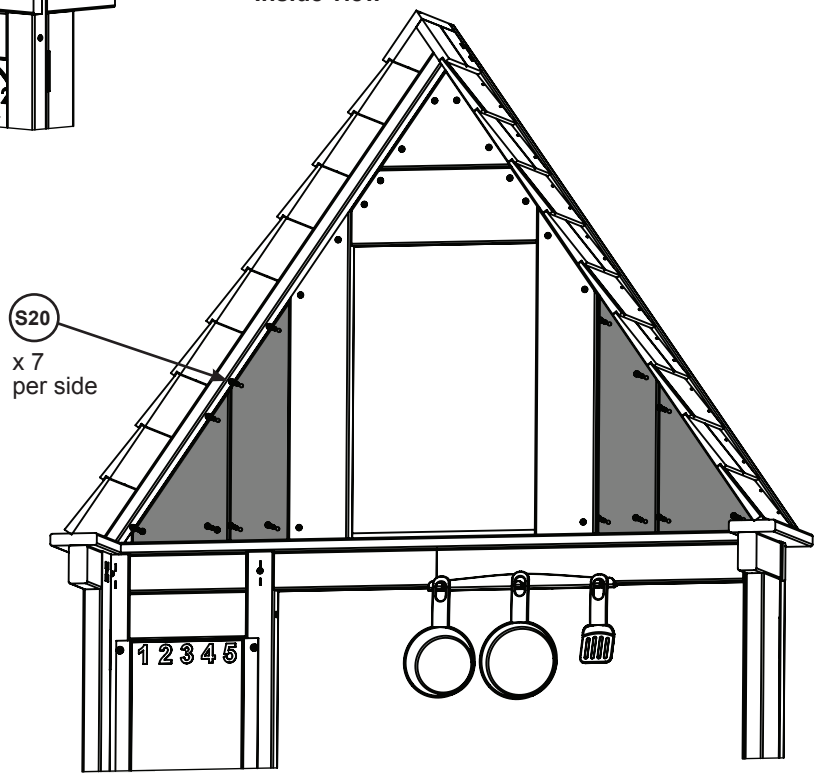

Wood Parts

6 x 104 Gable Side B 5/8 x 3-1/4 x 12-11/16"
6 x 105 Gable Side C 5/8 x 5-1/4 x 8-1/32"

Hardware

42 x S20 #8 x 1-3/8" Wood Screw

Step 11: Attach Door Panel Accessories Part 1

A: Measure 18-1/4” up from the bottom of the (111) Door Assembly on the outside and inside and attach 1 Door Handle per side using 2 (S37) #7 x 5/8” Pan Screws per handle. (Fig. 11.1 and 11.2)

B: Measure 15” up from the bottom of the Door on the inside and attach 1 Catch Plate flush to the outside edge of the Door using 2 (S37) #7 x 5/8” Pan Screws. (Fig. 11.1 and 11.2)

Fig. 11.1

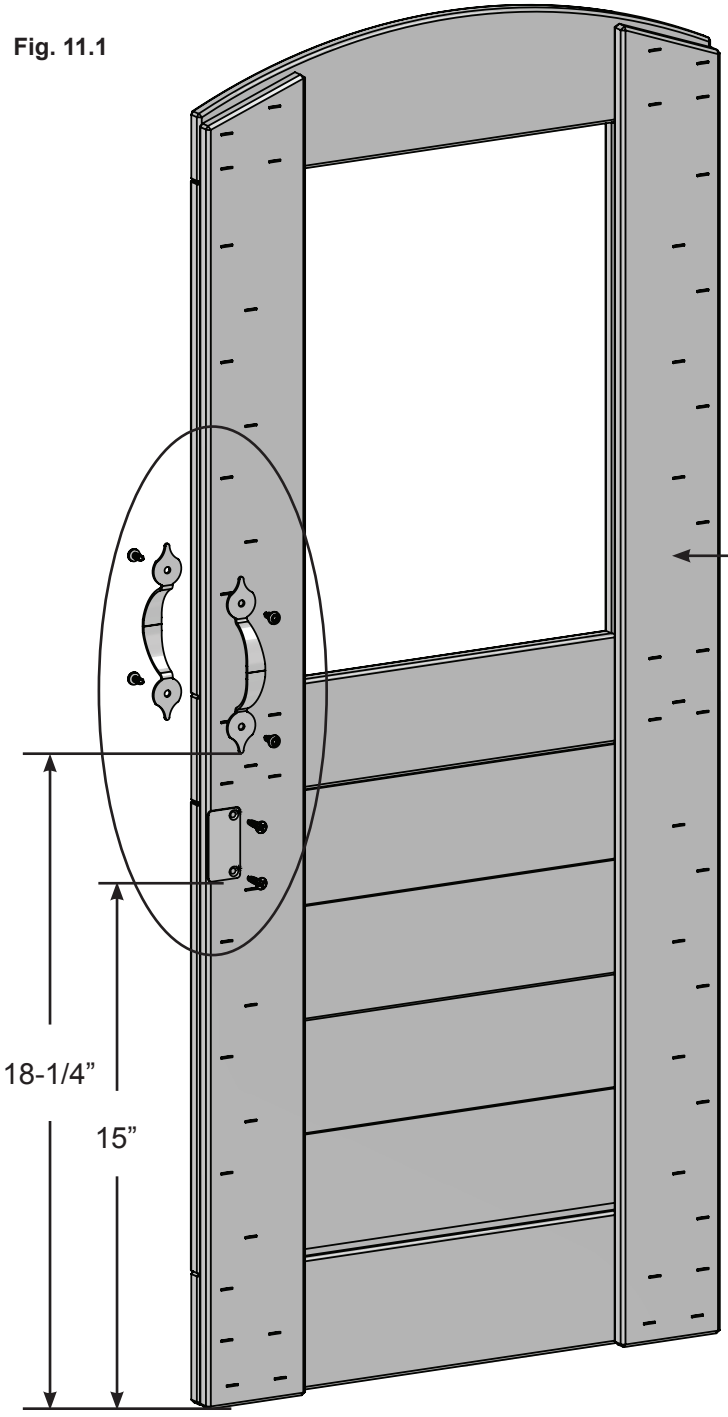

Fig. 11.2

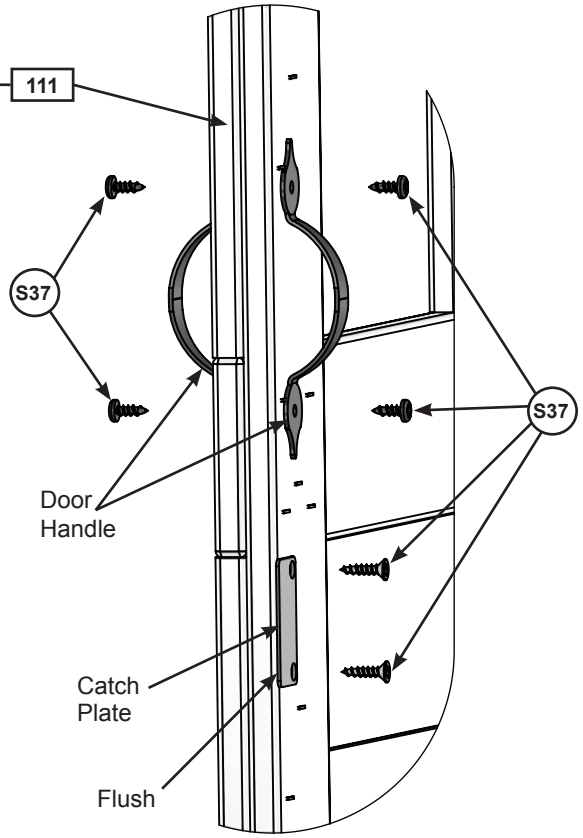

Wood Parts

1 x 111 **Door Assembly 1 x 16 1/4 x 38 27/64”**

Hardware

6 x S37 **#7 x 5/8” Pan Screw**

Other Parts

2 x Door Handle
1 x Magnetic Catch Plate

Step 11: Attach Door Panel Accessories Part 2

C: In the opening for the door measure 5/8” up from the bottom and attach (111) Door Assembly to hinges using 3 (S37) #7 x 5/8” Pan Screws per hinge. (Fig. 11.3, 11.4 and 11.5)

Fig. 11.3

Fig. 11.4

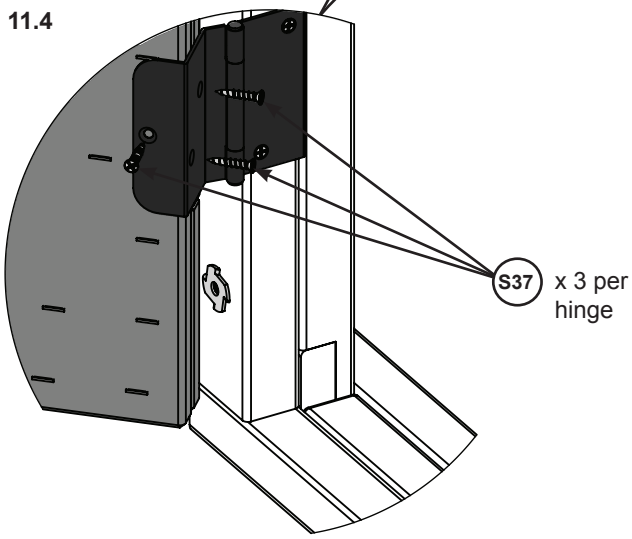

Fig. 11.5

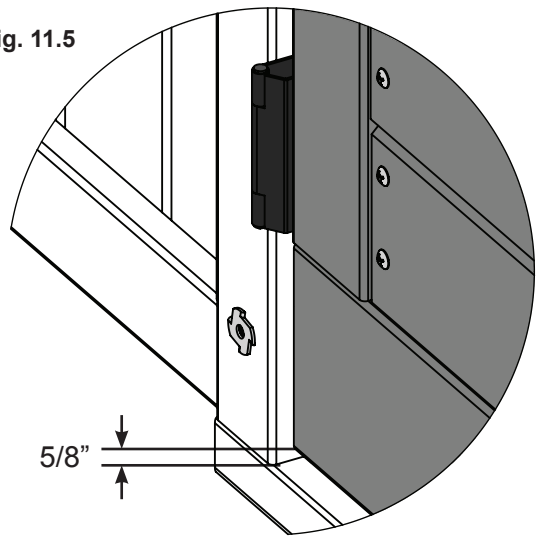

Hardware

6 x (S37) #7 x 5/8” Pan Screw

Step 11: Attach Door Panel Accessories Part 3

D: In the notched out opening of (112) Door Latch Block attach the Magnetic Catch using 2 (S38) #7 x 1-1/8" Pan Screws. (Fig. 11.6)

Important: Use a hand held screw driver and DO NOT over tighten.

E: From inside the assembly centre (112) Door Latch Block on Catch Plate so the Magnetic Catch and the Catch Plate can connect then attach to Door Wall with 2 (S15) #8 x 1-3/4" Wood Screws. (Fig. 11.7)

Fig. 11.6

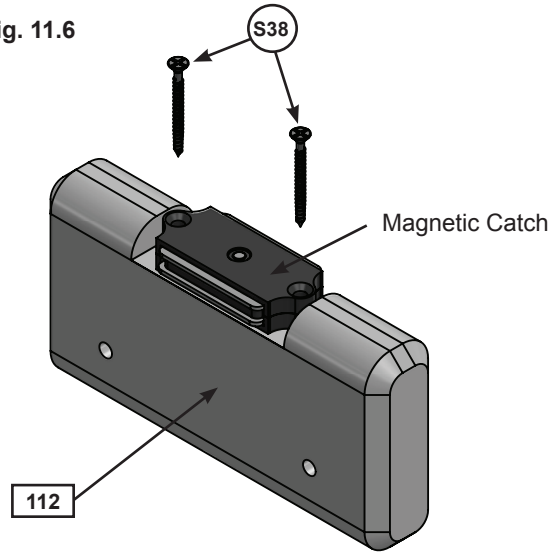

Fig. 11.7

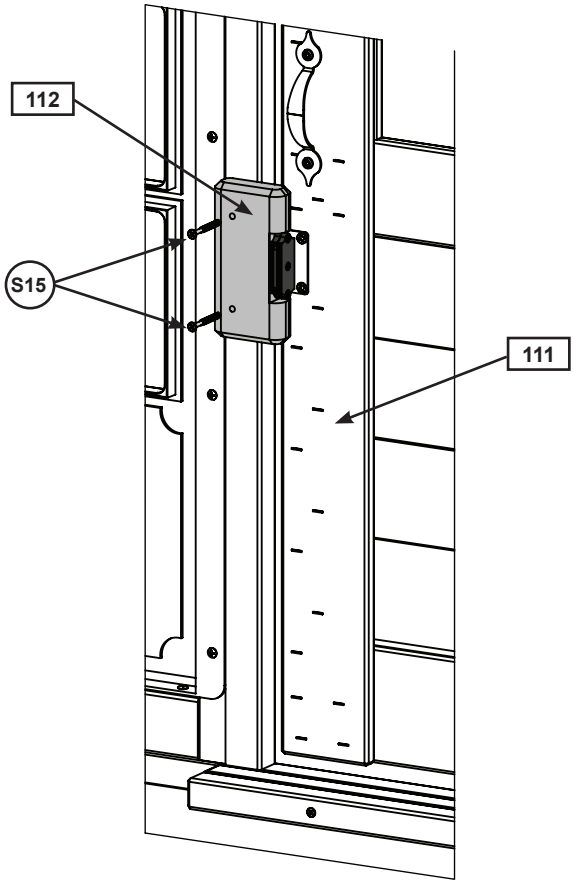

Wood Parts

1 x 112 Door Latch Block 15/16 x 2-1/2 x 5"

Hardware

2 x S38 #7 x 1-1/8" Pan Screw

2 x S15 #8 x 1-3/4" Wood Screw

Other Parts

1 x Magnetic Catch

Step 11: Attach Door Panel Accessories Part 4

F: On the outside face of the (111) Door Assembly place 1 Deep Window in the window gap and attach with 4 (S37) #7 x 5/8" Pan Screws. Repeat step for remaining 3 Deep Windows. (Fig. 11.8 and 11.9)

Fig. 11.8

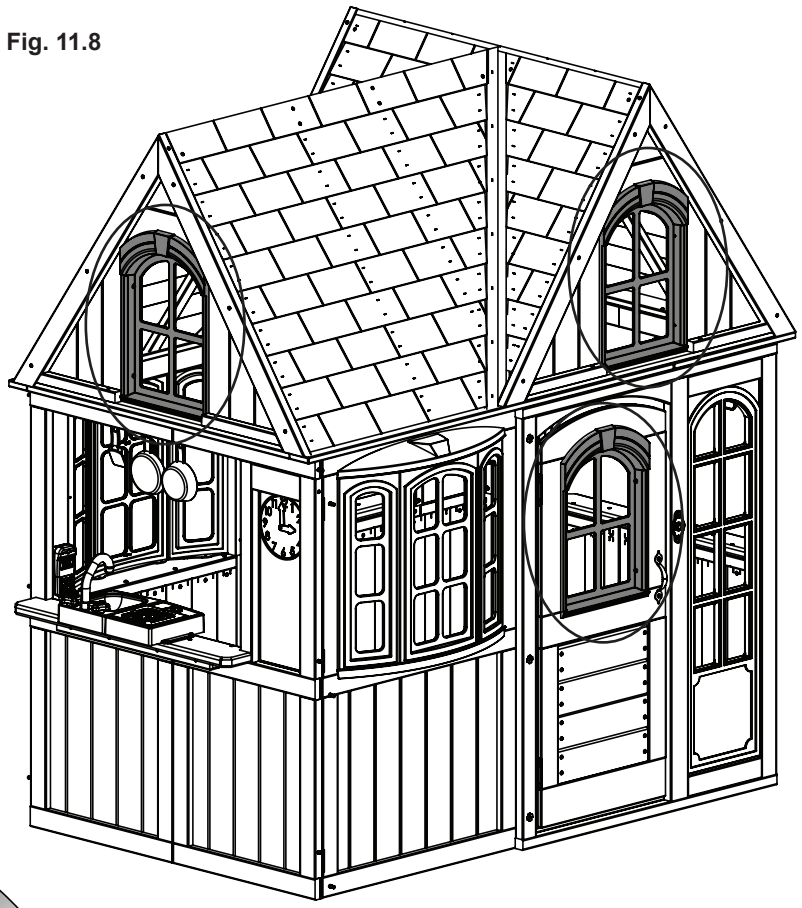

Fig. 11.9

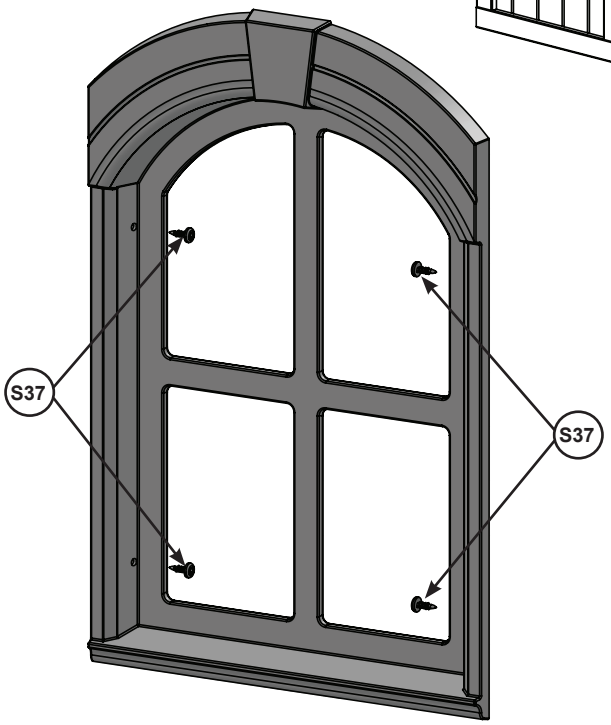

Hardware

16 x (S37) #7 x 5/8" Pan Screw

Other Parts

4 x Deep Window

Step 11: Attach Door Panel Accessories Part 5

G: On the top slat of the door panel, below the window attach the Door Mount Mail Box using 4 (S37) #7 x 5/8" Pan Screws. (Fig. 11.10)

Fig. 11.10

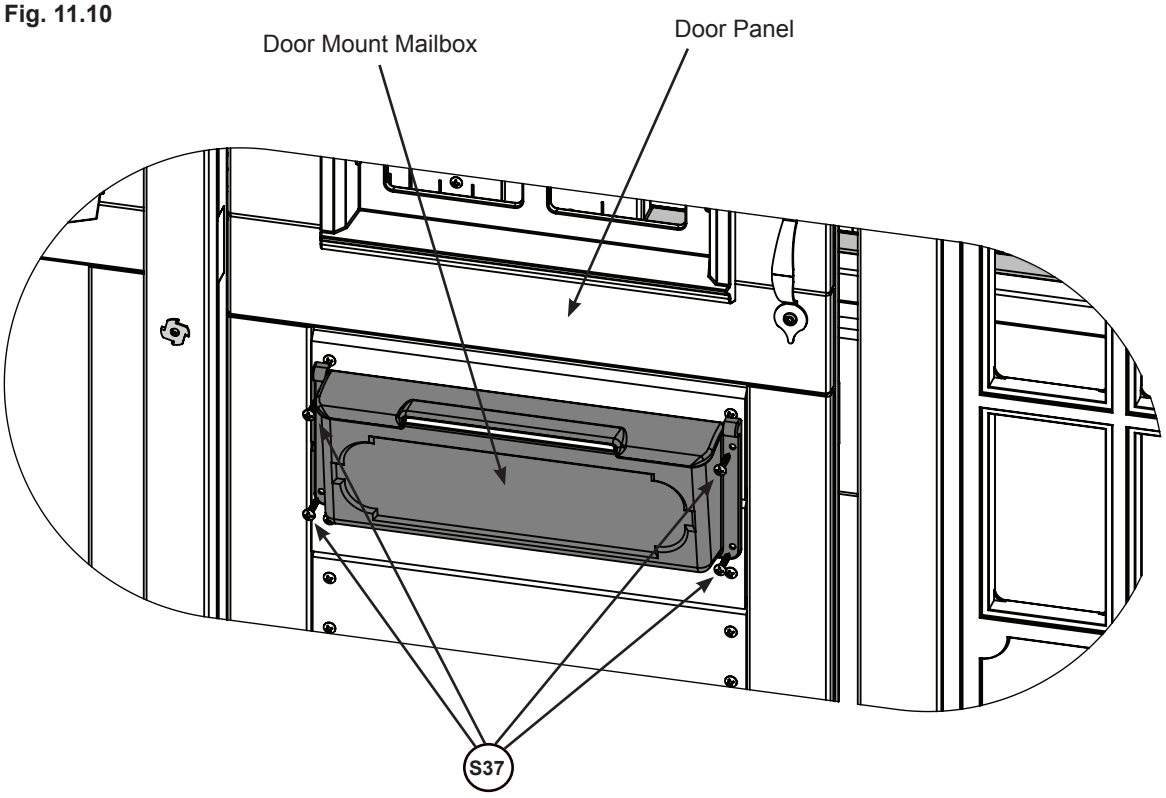

Hardware

4 x (S37) #7 x 5/8" Pan Screw

Other Parts

1 x Door Mount Mailbox Set

Step 12: Attach Corner Trim

A: On the Right Side Panel place 2 pieces of (121) Corner Trim on either side of the panel, flush to the outside edge. Attach using 6 (S38) #7 x 1-1/8" Pan Screws per Trim piece. (Fig. 12.1 and 12.2)

B: On the Front Wall Panel place 1 (121) Corner Trim alongside the Bay Window and flush to the outside edge of the panel. Attach using 6 (S38) #7 x 1-1/8" Pan Screws. (Fig. 12.1 and 12.2)

C: Repeat step to install the final (121) Corner Trim alongside the Bay Window and flush to the edge of the Back Wall Panel.

Fig. 12.1

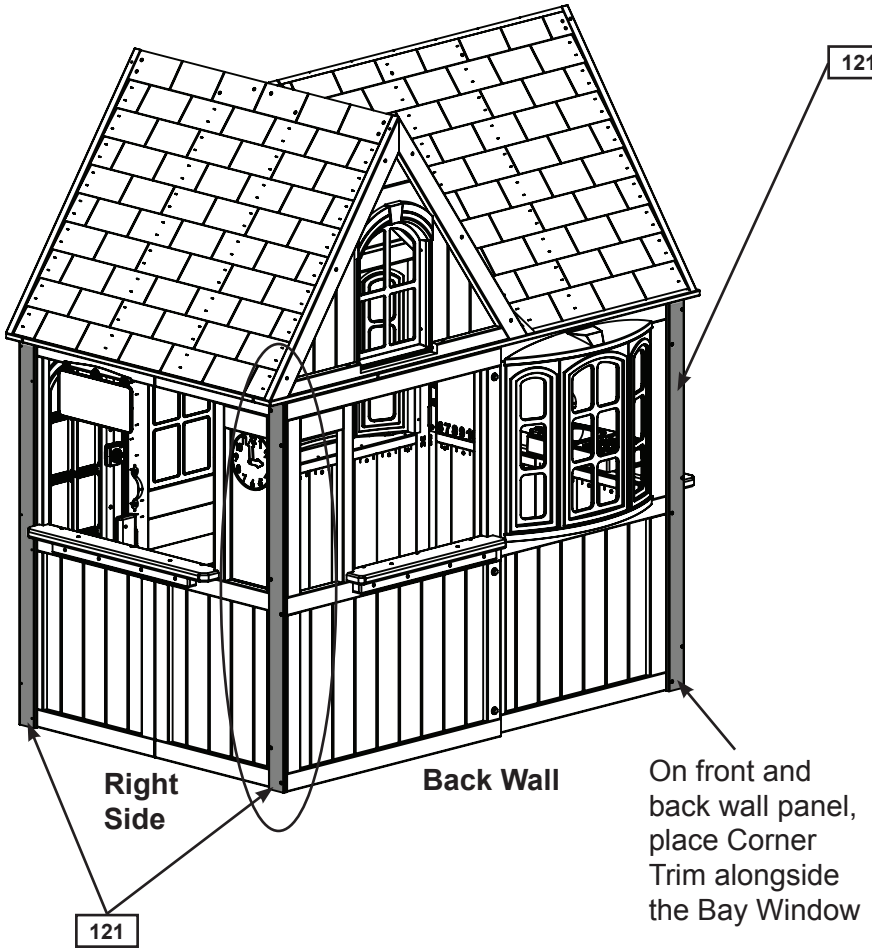

Fig. 12.2

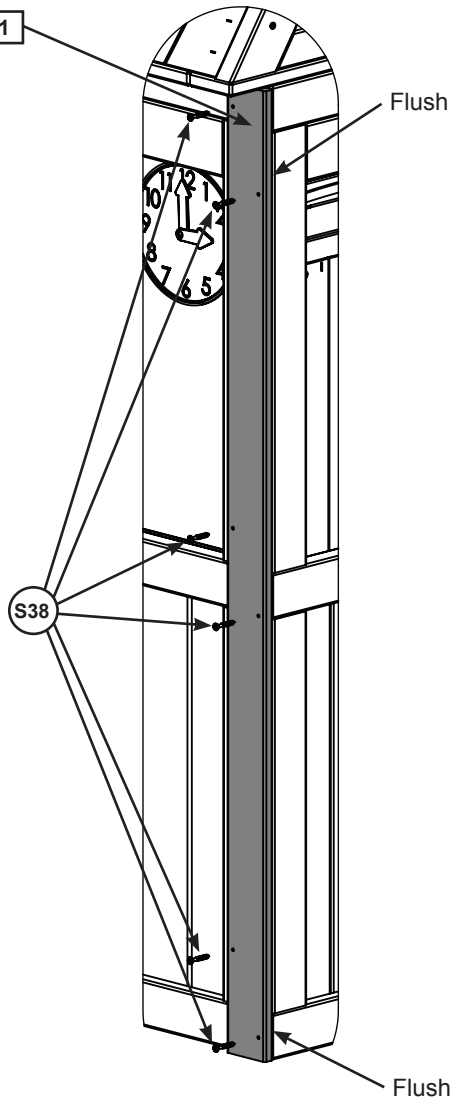

Wood Parts

4 x [121] Corner Trim 1/2 x 2-1/4 x 41-7/8"

Hardware

24 x (S38) #7 x 1-1/8" Pan Screw

Step 13: Chimney Assembly
Part 1

A: Bend the Chimney Wall to form a box and insert tabs into slots. (Fig. 13.1 and 13.2)

B: Place the (131) Chimney Top on top of the assembly and attach with 2 (S37) #7 x 5/8" Pan Screws. (Fig. 13.2, 13.3 and 13.4)

Fig. 13.1

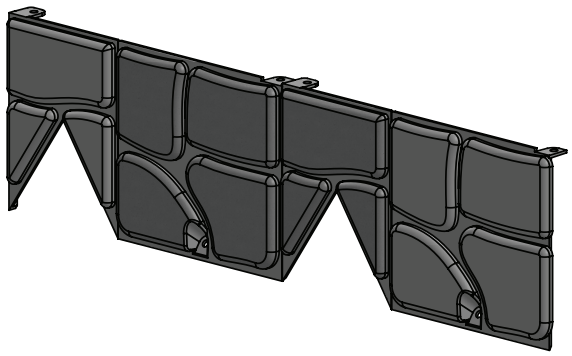

Fig. 13.2

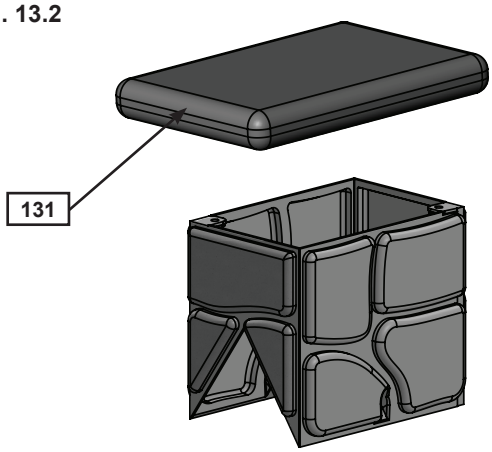

Fig. 13.3

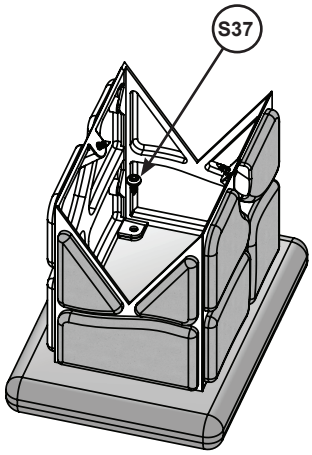

Fig. 13.4

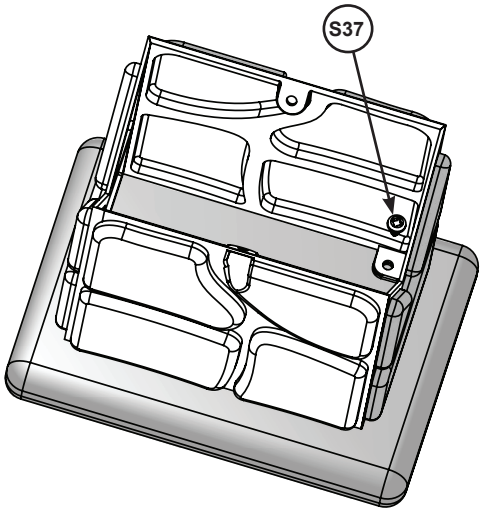

Wood Parts

1 x 131 Chimney Top 15/16 x 5-1/4 x 7-1/4"

Hardware

2 x S37 #7 x 5/8" Pan Screw

Other Parts

1 x Chimney Wall

Step 13: Chimney Assembly Part 2

C: On top of the Roof Assembly measure 24-1/2” in from Side Wall then place the Chimney Wall Assembly on top of the Roof Assembly as shown in fig. 13.5 and attach with 2 (S37) #7 x 5/8” Pan Screws. (Fig. 13.6)

Fig. 13.5

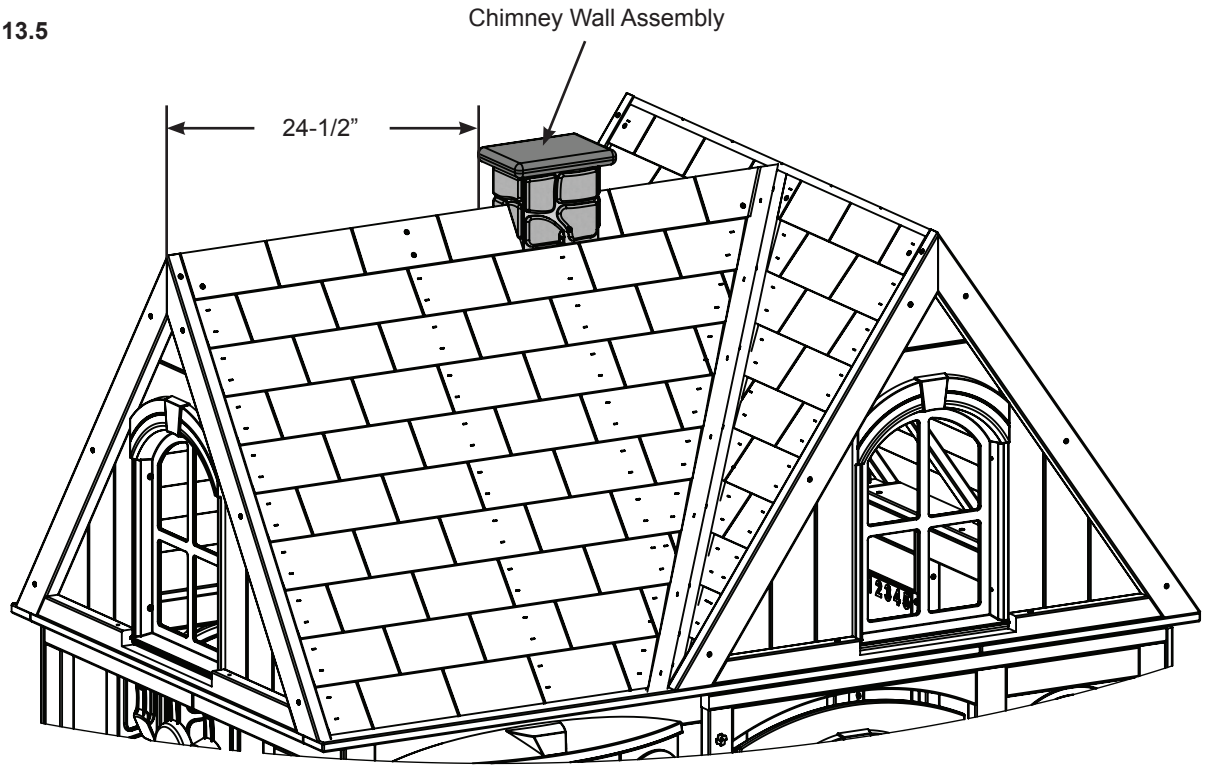

Fig. 13.6

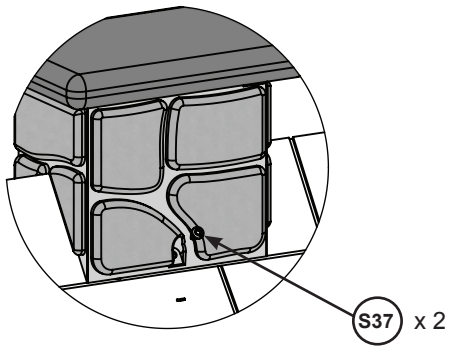

Hardware

2 x (S37) #7 x 5/8” Pan Screw

Step 14: Attach Flag

A: Insert 1 Flag into slots on 1 Flag Pole to complete 1 Deluxe Flying Flag as shown in Fig. 14.1.

B: Place (141) Flag Block to the top corner of the Gable, ensure that the edges are flush with the (071) Roof Ends. Attach using 2 (S15) #8 x 1-3/4" Wood Screws. (Fig. 14.2 and14.3)

C: Attach Flag to (141) Flag Block using 2 (S0) #8 x 7/8" Truss Screws. (Fig. 14.2 and14.3)

Fig. 14.1

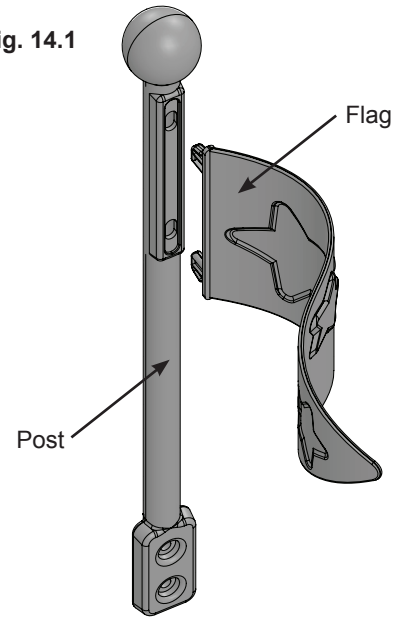

Fig. 14.2

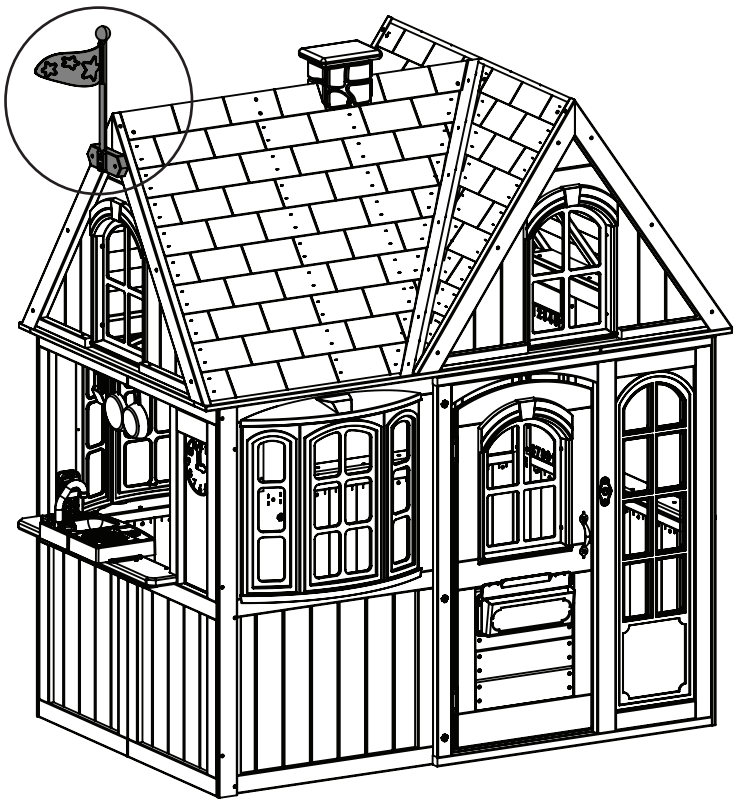

Fig. 14.3

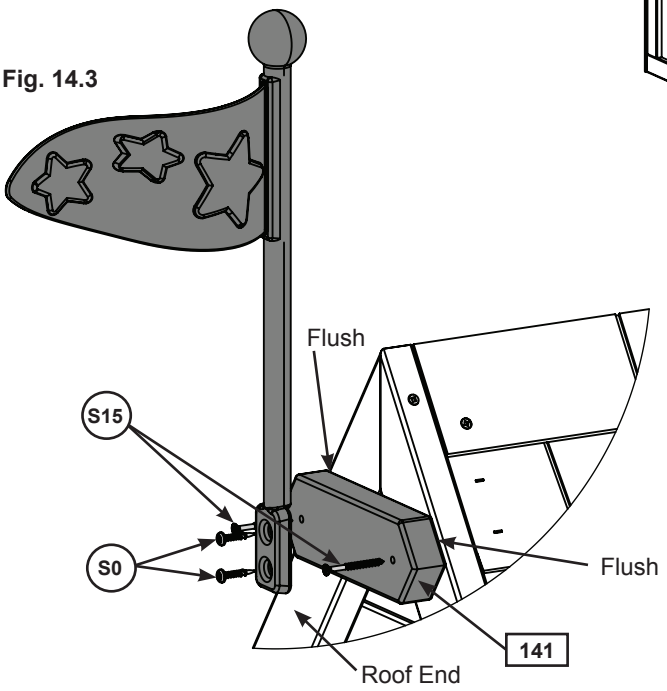

Wood Parts

1 x 141 **Flag Block 1 x 2-1/4 x 7"**

Hardware

2 x S0 **#8 x 7/8" Truss Screw**

2 x S15 **#8 x 1-3/4" Wood Screw**

Other Parts

1 x Deluxe Flying Flag Pole

1 x Deluxe Flying Flag

Final Step: Attach Playhouse Plaque

A: To the right of the door, on the top right hand corner of the narrow window panel install the Playhouse Plaque with 2 (S37) #7 x 5/8" Pan Screws. (Fig. 15.1 and 15.2)

Fig. 15.2

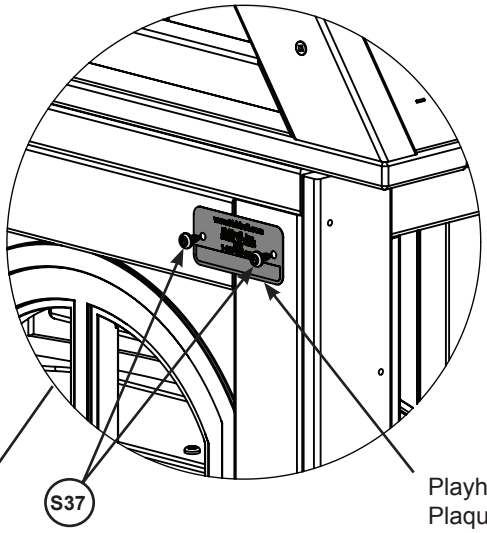

Fig. 15.1

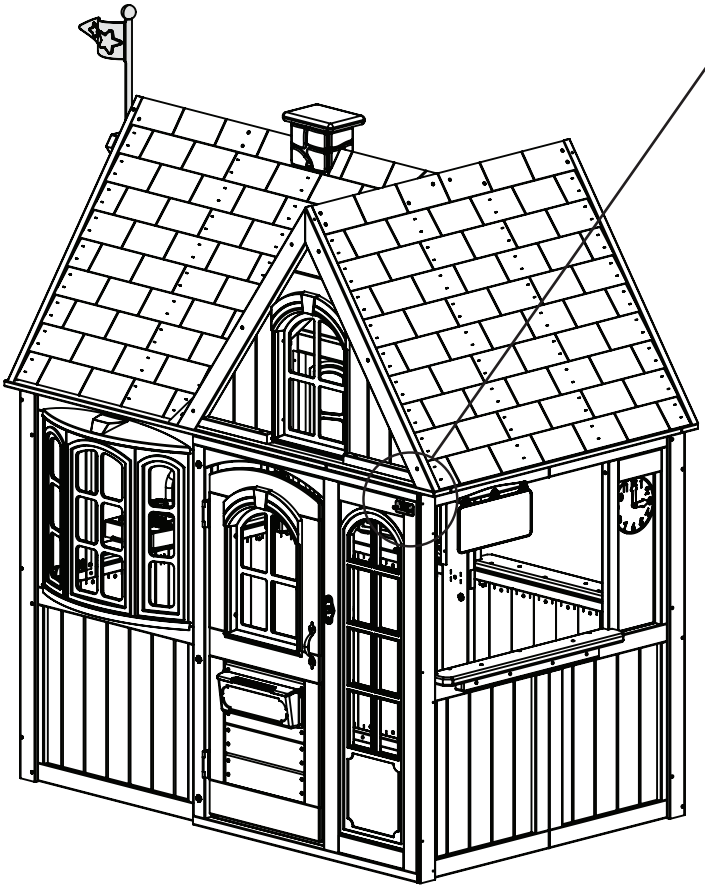

Hardware

2 x (S37) #7 x 5/8" Pan Screw

Other Parts

1 x Playhouse Plaque

NOTES

KIDKRAFT

Consumer Registration Card

First Name | Initial | Last Name

Street | Apt. No.

City | State/Province | ZIP/Postal Code

Country | Telephone Number

E-Mail Address

Model Name | Model Number | (Box Labels)

Serial Number (on ID Plaque)

Date Purchase | Purchased From

MM / DD / YY

How would you rate this product for quality?

☐ Excellent ☐ Very Good ☐ Average ☐ Below Average ☐ Poor

How would you rate this product for ease of assembly?

☐ Excellent ☐ Very Good ☐ Average ☐ Below Average ☐ Poor

How would you rate our instructions?

☐ Excellent ☐ Very Good ☐ Average ☐ Below Average ☐ Poor

How would you rate the quality of packaging?

☐ Excellent ☐ Very Good ☐ Average ☐ Below Average ☐ Poor

Would you recommend the purchase of our products to friends and family?

☐ Yes ☐ No

Comments:

MAIL TO:
KidKraft
4630 Olin Road
Dallas, TX 75244
United States
Attention: Customer Service

Fill out your registration card online at
https://prdregistration.kidkraft.com/

KidKraft would like to say Thank You for your time and feedback.

CUT ALONG LINE